To be kept by the user

May 2018

Sirius three WH

Installation operation and maintenance manual

Wall Hung Stainless Steel Condensing Boilers

90 - 110 kW

Working towards
a cleaner future

POTTERTON
COMMERCIAL

Dear Customer,
Thank you for your purchase. Our company is confident that your new product will meet all of your requirements. Purchasing this product gives you a solution that provides peace of mind, ease of use and exceptional performance. Please ensure that you read this manual before installing the product as it contains vital information for its correct use. Failure to install the product as advised in this manual may result in void of the warranty terms and conditions.

Our company declares that these products are marked CE in compliance with the essential requirements of the following Directives:

- Gas regulation (EU) **2016/426**
- Efficiency Directive **92/42/EEC**
- Electromagnetic Compatibility Directive **2014/30/EU**
- Low Voltage Directive **2014/35/EU**
- Ecodesign directive **2009/125/EC**
- Regulation (EU) No **2017/1369** (for boilers with Power<70kW)
- Ecodesign regulation (EU) No **813/2013**
- Energy labelling regulation (EU) No **811/2013** (for boilers with Power<70kW)

Our company, constantly striving to improve the products, reserves the right to modify the details given in this documentation at any time and without notice. These Instructions are only meant to provide consumers with use information and under no circumstance should they be construed as a contract with a third party.

The appliance can be used by children aged 8 or over and by people with reduced physical, sensory or mental faculties, or who do not have the required experience or knowledge, provided they are supervised or have received instructions on using the appliance safely and understanding its intrinsic hazards. Children must not play with the appliance. The cleaning and maintenance operations reserved to the user must not be performed by unsupervised children.

CONTENT

DESCRIPTION OF SYMBOLS 3
SAFETY WARNINGS 3
GENERAL PRECAUTIONS 4
1. TECHNICAL SPECIFICATIONS 5
1.1 TECHNICAL PARAMETERS 6
1.2 PRODUCT FICHE 7
2. INSTALLING THE BOILER 8
3. INSTALLING THE FLUES 12
4. CONCENTRIC FLUES 12
5. CASCADE FLUES 14
6. BOILER PUMP 14
7. PUMP CAPACITY/ HEAD 16
8. ELECTRICAL CONNECTIONS 16
8.1 INSTALLING THE CONTROL PANEL ON THE WALL 18
9. ACCESSORIES NOT INCLUDED IN THE PACKAGING 19
9.1 OUTDOOR SENSOR 19
9.2 WIRING OF BOILER PUMP 21
9.3 HEATING SYSTEM PUMP 21
9.4 DOMESTIC HOT WATER CYLINDER 21
9.5 MIXED ZONES (SEE CHAP. "DIAGRAMS") 21
9.6 OUTDOOR SYSTEM MANAGEMENT MODULES 21
9.7 BOILERS IN A CASCADE CONNECTION (SEE CHAP. "DIAGRAMS") 21
9.8 AGU 2.550 21
9.9 CONNECTING THE ROOM THERMOSTAT 22
10. COMMISSIONING THE BOILER 22
CONTROL PANEL 22
10.1 BASIC CONTROL PANEL SETTINGS 23
11. FILLING THE SYSTEM 23
12. SYSTEM AIR EXTRACTION FUNCTION 23
13. GAS VALVE COMMISSIONING 23
13.1 GAS CONVERSION 24
14. SPECIAL FUNCTIONS 24
15. TEMPERATURE ADJUSTMENT 25
16. OPERATING MODES 25
16.1 HEATING 25
16.2 HOLIDAY PROGRAMME 25
17. HOURLY PROGRAMMING 26
17.1 GROUPS OF DAYS 26
17.2 SINGLE DAYS 26
17.3 HOURLY PROGRAMMING EDIT PROCEDURE (HEATING / DHW) 26
17.4 CONTROL PANEL BLOCK FUNCTION 27
18. SWITCHING OFF THE BOILER 27
19. PROLONGED SHUTDOWN / FROST PROTECTION 27
ENERGY-SAVING TIPS 28
20. ACCESS TO THE PARAMETER CONFIGURATION MENUS 28
20.1 INFORMATION MENU 28
20.2 TIME AND DATE MENU 28
20.3 CHANGE LANGUAGE (OPERATOR UNIT MENU) 29
21. FUNCTIONS ASSOCIATED WITH THE EASY MENU BUTTON (RAPID MENU) 29
22. FAULTS 29

22.1 RESETTING FAULTS 30
23. FAULTS THAT CANNOT BE RESET BY THE USER 30
24. ADJUSTMENT AND SAFETY DEVICES 31
25. ROUTINE MAINTENANCE INSTRUCTIONS 31
26. ANNUAL SERVICING 32
26.1 CLEANING THE HEAT EXCHANGER FUMES SIDE 32
26.2 CHECKING THE BURNER 33
POSITIONING THE ELECTRODES 33
26.3 CLEANING THE CONDESATE TRAP 33
26.4 COMBUSTION PARAMETERS 33
27. THERMAL FUSE REPLACEMENT OF HEAT EXCHANGER 34
28. DISMANTLING, DISPOSAL AND RECYCLING 34
29. DIAGRAMS 35

DESCRIPTION OF SYMBOLS

WARNING
Risk of damage to or malfunction of the appliance. Pay special attention to the warnings concerning danger to people.

DANGER OF BURNS
Wait for the appliance to cool down before working on the parts exposed to heat.

DANGER - HIGH VOLTAGE
Live components - electrocution hazard.

DANGER OF FREEZING
Possible formation of ice due to low temperatures.

IMPORTANT INFORMATION
Information to read with particular care as it is useful for the correct operation of the boiler.

GENERIC PROHIBITION
It is forbidden to do/use the things indicated alongside the symbol.

SYMBOLS ON THE CONTROL PANEL (section 8.1.1 - 10)			
	Turn knob **B**		Display shows
	Press knob **B**		Press button **A** and knob **B** together
	Press button **A** or **C**		Press buttons **A** and **C** together

SAFETY WARNINGS

SMELL OF GAS

- Switch off the boiler.
- Do not activate any electrical device (such as switching on the light).
- Put out any naked flames and open the windows.
- Call an Authorised Service Engineer.

SMELL OF COMBUSTION FUMES

- Switch off the boiler.
- Open all the doors and windows to ventilate the room.
- Call an Authorised Service Engineer.

FLAMMABLE MATERIAL

Do not use and/or store highly flammable material (thinners, paper, etc.) near the boiler.

SERVICING AND CLEANING THE BOILER

Switch off the boiler before working on it.

The appliance is not intended to be used by persons with reduced physical, sensory or mental capacities, or who lack experience or knowledge, unless, through the mediation of a person responsible for their safety, they have had the benefit of supervision or of instructions on the use of the appliance.

GENERAL PRECAUTIONS

This boiler has been designed to heat water to a temperature lower than boiling point at atmospheric pressure. It must be connected to a central heating system and to a domestic hot water supply system according to its performance and power output. Before having the boiler installed by a qualified service engineer, make sure the following operations are performed:

- Make sure that the boiler is adjusted to use the type of gas delivered by the gas supply. To do this, check the markings on the packaging and the data label on the appliance.
- Make sure that the flue terminal draft is appropriate, that the terminal is not obstructed and that no exhaust gases from other appliances are expelled through the same flue duct, unless the latter has been specially designed to collect exhaust gas from more than one appliance, in compliance with current laws and regulations.
- Make sure that, if the boiler is connected to existing flue ducts, these have been thoroughly cleaned as residual products of combustion may detach from the walls during operation and obstruct the flow of fumes.
- To ensure correct operation and maintain the warranty, observe the following precautions:

1. DHW circuit

1.1 If the water is harder than 20 °F (1 °F = 10 mg calcium carbonate per litre of water), install a polyphosphate dispenser or an equivalent treatment system, compliant with current regulations.

1.2 Thoroughly flush the system after installation of the appliance and before use.

1.3 The materials used for the DHW circuit comply with Directive 98/83/EC.

2. Heating circuit

2.1 New system: Before installing the boiler, the system must be cleaned and flushed to eliminate residual thread-cutting swarf, solder and any solvents, using suitable off-the-shelf non-acid and non-alkaline products that do not damage metal, plastic and rubber parts. To protect the system from scale, use inhibitors such as SENTINEL X100 and FERNOX protector for heating circuits. Use these products in strict compliance with the manufacturers' instructions.

2.2 Existing system: Before installing the boiler, drain the system and clean it to remove sludge and contaminants, using suitable proprietary products. Recommended cleaning products are: SENTINEL X300 or X400 and FERNOX regenerator for heating circuits. Use these products in strict compliance with the manufacturers' instructions. Remember that the presence of foreign bodies in the heating system can adversely affect boiler operation (e.g. overheating and excessive noise of the heat exchanger).

Initial lighting of the boiler must be carried out by an authorised Service Engineer who must first ensure that:

- The rated data correspond to the supply (electricity, water and gas) data.
- That the installation complies with current regulations.
- The appliance is correctly connected to the power supply and earthed.

The appliance must be installed in a ventilated boiler room pursuant to current regulations (appliances with heating capacity > 40 kW).

Failure to observe the above will render the warranty null and void. Prior to commissioning, remove the protective plastic coating from the boiler. Do not use any tools or abrasive detergents to do this as you may damage the painted surfaces.

Do not leave any packaging (plastic bags, polystyrene, etc.) within the reach of children as they are a potential source of danger.

1. TECHNICAL SPECIFICATIONS

Model: SIRIUS THREE		WH-90	WH-110
Category		II_{2H3P}	
Gas used Natural Gas and LPG	-	G20 - G31	
Rated heat input	kW	87,4	104,9
Reduced heat input (G20)	kW	9,7	11,7
Reduced heat input (G31)	kW	12,5	11,7
Rated heat output 80/60 °C	kW	85,0	102,0
Rated heat output 50/30 °C	kW	91,8	110,2
Reduced heat output 80/60 °C (G20)	kW	9,4	11,4
Reduced heat output 80/60 ° C (G31)	kW	12,2	11,4
Reduced heat output 50/30 °C (G20)	kW	10,2	12,3
Reduced heat output 50/30 ° C (G31)	kW	13,1	12,3
Net Rated efficiency 50/30 °C	%	105,5	105,1
Max. pressure of water in heating circuit	bar	4	
Min. pressure of water in heating circuit	bar	1	
Capacity of boiler circuit (volume of water)	l	9	10
Temperature range in heating circuit	°C	25÷80	
Flue Types	-	C13 - C33 - B23	
Concentric flue duct diameter	mm	110/160	
Diameter of separate outlets	mm	110/110	
Max. mass flow rate of flue (G20)	kg/s	0,040	0,047
Min. mass flow rate of flue (G20)	kg/s	0,005	0,005
Max. temperature of fumes	°C	70	
NOx Class	-	6	
Natural gas supply pressure 2H (G20)	mbar	20	
Propane gas supply pressure 3P (G31)	mbar	37	
Power supply voltage	V	230	
Power supply frequency	Hz	50	
Rated power supply (Without Pump)	W	130	165
Rated power supply (With Pump)	W	275	320
Rated power supply	W	275	320
Net weight (empty)	kg	83	93
Dimensions - height	mm	952	
- width	mm	600	
- depth	mm	584	
Protection-limit against humidity (EN 60529)	-	IPX5D	
CE Certificate	Nr	0085CM0128	

CONSUMPTION AT HEAT INPUT Qmax and Qmin

Qmax (G20) - 2H	m^3/h	9,25	11,10
Qmin (G20) - 2H	m^3/h	1,03	1,24
Qmax (G31) - 3P	kg/h	6,60	7,92
Qmin (G31) - 3P	kg/h	0,97	0,91

1.1 TECHNICAL PARAMETERS

POTTERTON COMMERCIAL			SIRIUS THREE WH-90	SIRIUS THREE WH-110
Condensing boiler			Yes	Yes
Low-temperature boiler(1)			No	No
B1 boiler			No	No
Cogeneration space heater			No	No
Combination heater			No	No
Rated heat output	*Prated*	kW	85	102
Useful heat output at rated heat output and high temperature regime(2)	P_4	kW	85.0	102.0
Useful heat output at 30% of rated heat output and low temperature regime(1)	P_1	kW	28.4	34.0
Seasonal space heating energy efficiency	η_s	%		
Useful efficiency at rated heat output and high temperature regime(2)	η_4	%	87.7	87.6
Useful efficiency at 30% of rated heat output and low temperature regime(1)	η_1	%	97.5	97.4
Auxiliary electricity consumption				
Full load	*elmax*	kW	0.130	0.165
Part load	*elmin*	kW	0.017	0.018
Standby mode	P_{SB}	kW	0.003	0.003
Other items				
Standby heat loss	P_{stby}	kW	0.089	0.097
Ignition burner power consumption	P_{ign}	kW	0.000	0.000
Annual energy consumption	Q_{HE}	GJ		
Sound power level, indoors	L_{WA}	dB	63	63
Emissions of nitrogen oxides	NO_X	mg/kWh	31	22
Domestic hot water parameters				
Declared load profile				
Daily electricity consumption	Q_{elec}	kWh		
Annual electricity consumption	*AEC*	kWh		
Water heating energy efficiency	η_{wh}	%		
Daily fuel consumption	Q_{fuel}	kWh		
Annual fuel consumption	*AFC*	GJ		

(1) Low temperature means for condensing boilers 30°C, for low temperature boilers 37°C and for other heaters 50°C return temperature (at heater inlet).
(2) High temperature regime means 60°C return temperature at heater inlet and 80°C feed temperature at heater outlet.

1.2PRODUCT FICHE

POTTERTON COMMERCIAL		SIRIUS THREE WH-90	SIRIUS THREE WH-110
Space heating - Temperature application		Medium	Medium
Water heating - Declared load profile			
Seasonal space heating energy efficiency class			
Water heating energy efficiency class			
Rated heat output *(Prated or Psup)*	kW	85	102
Space heating - Annual energy consumption	GJ		
Water heating - Annual energy consumption	kWh(1) GJ(2)		
Seasonal space heating energy efficiency	%		
Water heating energy efficiency	%		
Sound power level L_{WA} indoors	dB	63	63
(1) Electricity (2) Fuel			

2. INSTALLING THE BOILER

After fixing the boiler on the wall, replace the cap at the bottom of the siphon with the one in the pack, reusing the ring nut and referring to the figure. Fill the siphon and check it for any leaks.

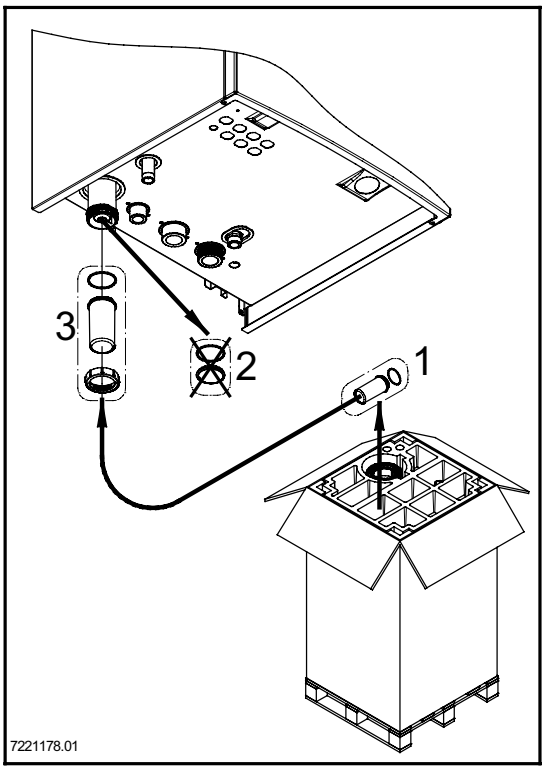

*The template outline is shown in chap. "**INSTALLING THE BOILER**" .*

After deciding the exact location of the boiler, fix the template to the wall. Connect the system to the gas and water inlets present on the lower bar of the template. Make sure the rear part of the boiler (back) is as parallel as possible to the wall (otherwise, shim the lower part). Fit two **G1"1/2** taps (flow and return) on the central heating circuit; these taps make it possible to carry out important operations on the system without draining it completely. On the Italian market, the system must comply with Raccolta R safety provisions (limit thermostat, safety pressure switch, fuel cut-off valve, etc..). Fit a hydraulic separator, sized according to maximum boiler and system pressure, downline from the hydraulic connectors of the boiler. If you are either installing the boiler on an existing system or replacing one, as well as the above, fit a settling tank under the boiler on the system return line in order to collect any deposits and scale circulating in the system after flushing. After fixing the boiler to the template, connect the flue and air ducts, supplied as accessories, as described in the following sections. Connect the siphon to a drain trap, making sure the slope is continuous. Avoid horizontal stretches. The boiler is electronically fitted out for connection to an external storage boiler.

Take special care when filling the heating system. In particular, open any thermostat valves in the system, ensure the water enters slowly in order to prevent the formation of air inside the primary circuit until operating pressure is reached. Lastly, vent any radiators in the system. POTTERTON COMMERCIAL declines all liability for damage deriving from the presence of air bubbles in the primary exchanger due to the incorrect or imprecise observance of the above.

Tighten the boiler water connections with care (maximum tightening torque 30 Nm).

Do not lift the boiler exerting pressure on the plastic parts like the siphon and the flue turret.

Before starting up the boiler, fill the water siphon to prevent the fumes from diffusing in the room.

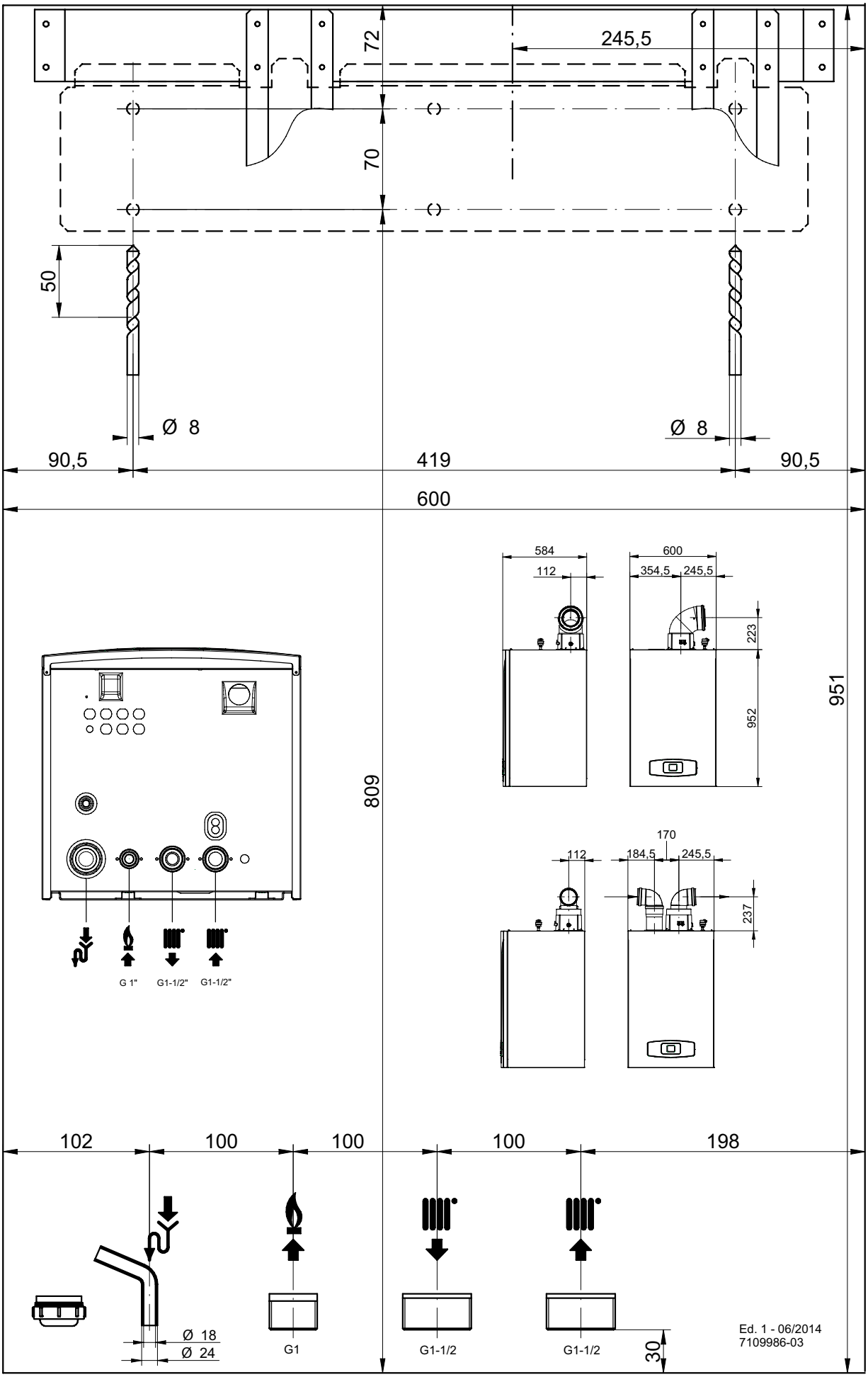
72
245,5
70
50
Ø 8
Ø 8
90,5
419
90,5
600
584
112
600
354,5
245,5
223
952
951
809
170
112
184,5
245,5
237
G 1"
G1-1/2"
G1-1/2"
102
100
100
100
198
Ø 18
Ø 24
G1
G1-1/2
G1-1/2
30
Ed. 1 - 06/2014
7109986-03

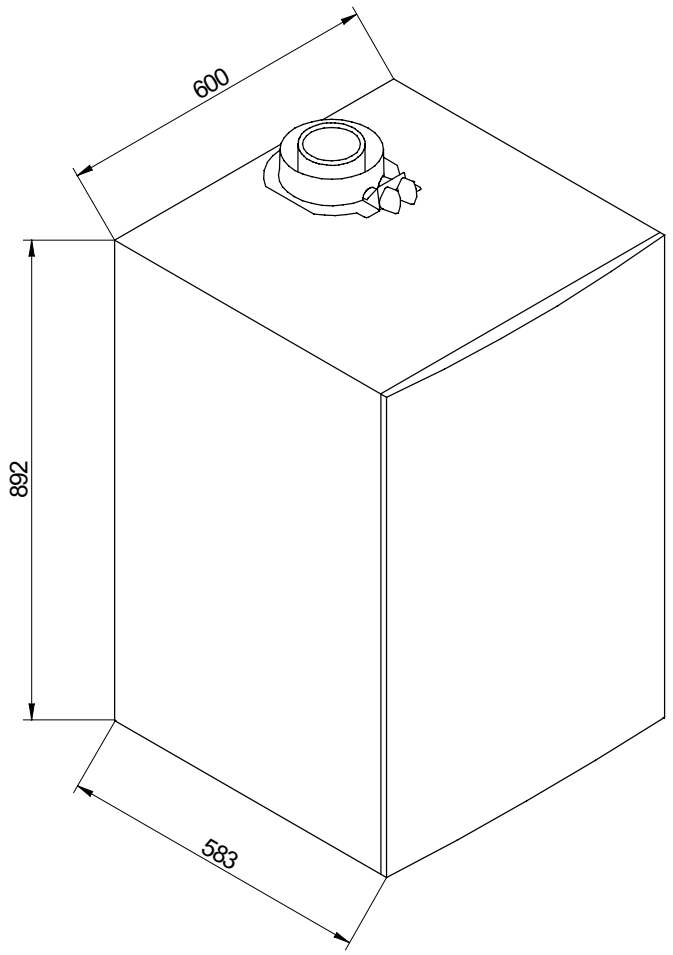

CR_0775

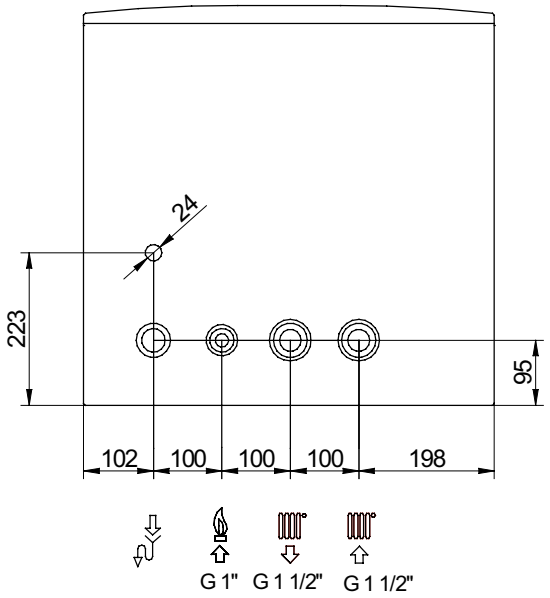

BOILER SCHEMATIC LAYOUT

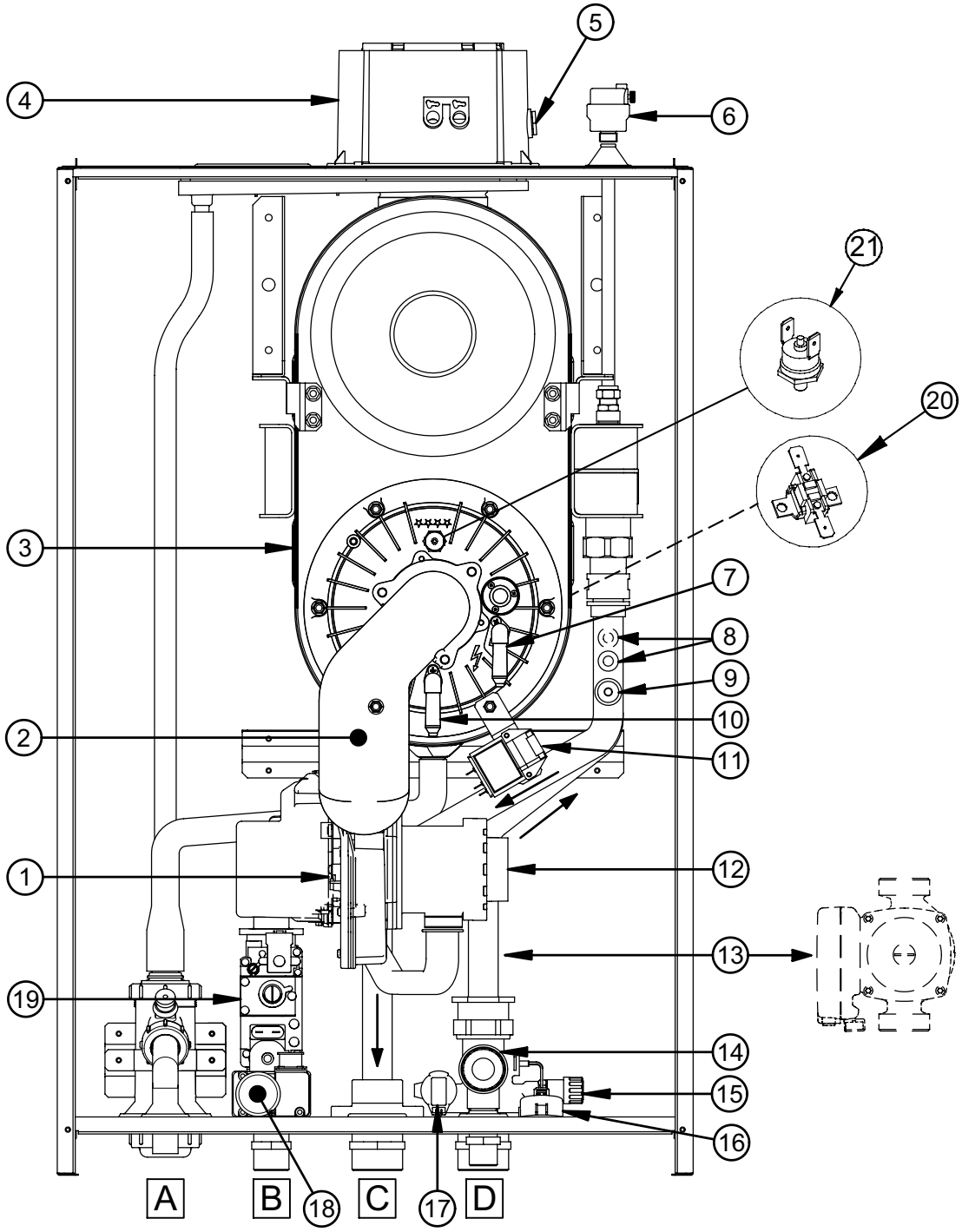

1	Fan	14	Hydraulic Safety valve
2	Air/gas blend manifold	15	Boiler drain tap
3	Primary exchanger	16	Pressure gauge
4	Coaxial flue connector	17	Hydraulic Pressure Sensor
5	Flue sensor	18	Gas pressure switch
6	Automatic air vent	19	Gas valve
7	Ignition electrode	20	Thermal fuse (rear)
8	NTC water heating sensor (flow and return)	21	Exchanger flange thermostat
9	Safety overflow temperature thermostat	A	Siphon with condensate drain
10	Flame detection electrode	B	Gas inlet connection
11	Spark generator	C	Heating flow connection
12	Venturi	D	Heating return connection
13	Pump		

3. INSTALLING THE FLUES

The boiler is easy and flexible to install thanks to the extensive range of available accessories, as described below. The boiler has been designed for connection to a vertical or horizontal concentric flue.

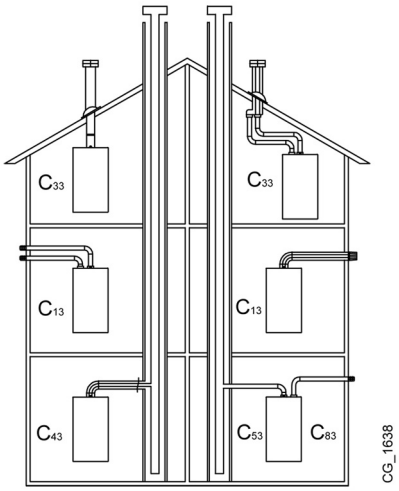

WARNINGS

C13, C33 The terminals for separate flues must be fitted in accordance with the BS standard and the Clean Air Act 1993. Detailed instructions are provided with the individual accessories.

For optimal installation, the accessories supplied by the manufacturer should be used.

TABLE 1A

If the flue and air ducts installed are not supply by POTTERTON COMMERCIAL, make sure they are certitied for the type of use and have a maximum pressure drop as indicated in the table to the side.

	ΔP (Pa)
WH 90	200
WH 110	200

To optimise operating safety, make sure the flues are firmly fixed to the wall with suitable brackets for every 1 metre of flue.

Make sure there is a minimum downward slope of 5 cm (3 degrees) per metre of duct towards the boiler.

***SOME OUTLET FLUE INSTALLATION EXAMPLES AND THEIR RELATIVE MAXIMUM LENGTHS ARE SHOWN IN CHAP.* "CONCENTRIC FLUES".**

4. CONCENTRIC FLUES

This type of flue is used to discharge exhaust fumes and draw combustion air both outside the building. The 87° concentric bend allows the boiler to be connected to a flue-air in any direction as it can be rotated by 360° It can also be used as a supplementary curve combined with a concentric flue or a 45° bend.
If fumes are discharged outside the building, the flue-air must protrude at least 200 mm from the wall to allow weathering surround to be fitted and sealed to avoid water infiltrations.

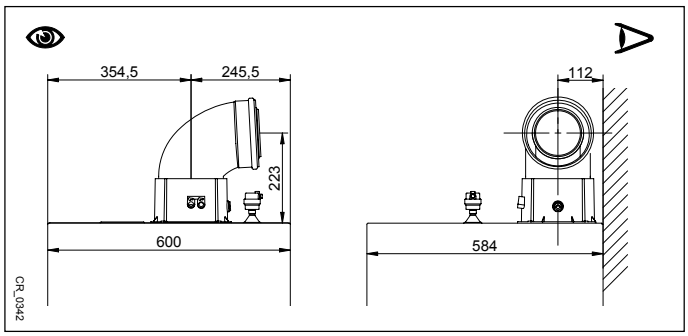

- **The 87° bend reduces the total flue length by 1 metre.**
- **The 45° bend reduces the total flue length by 0.5 metres.**
- **The first 87° bend is not included when calculating the maximum available length.**

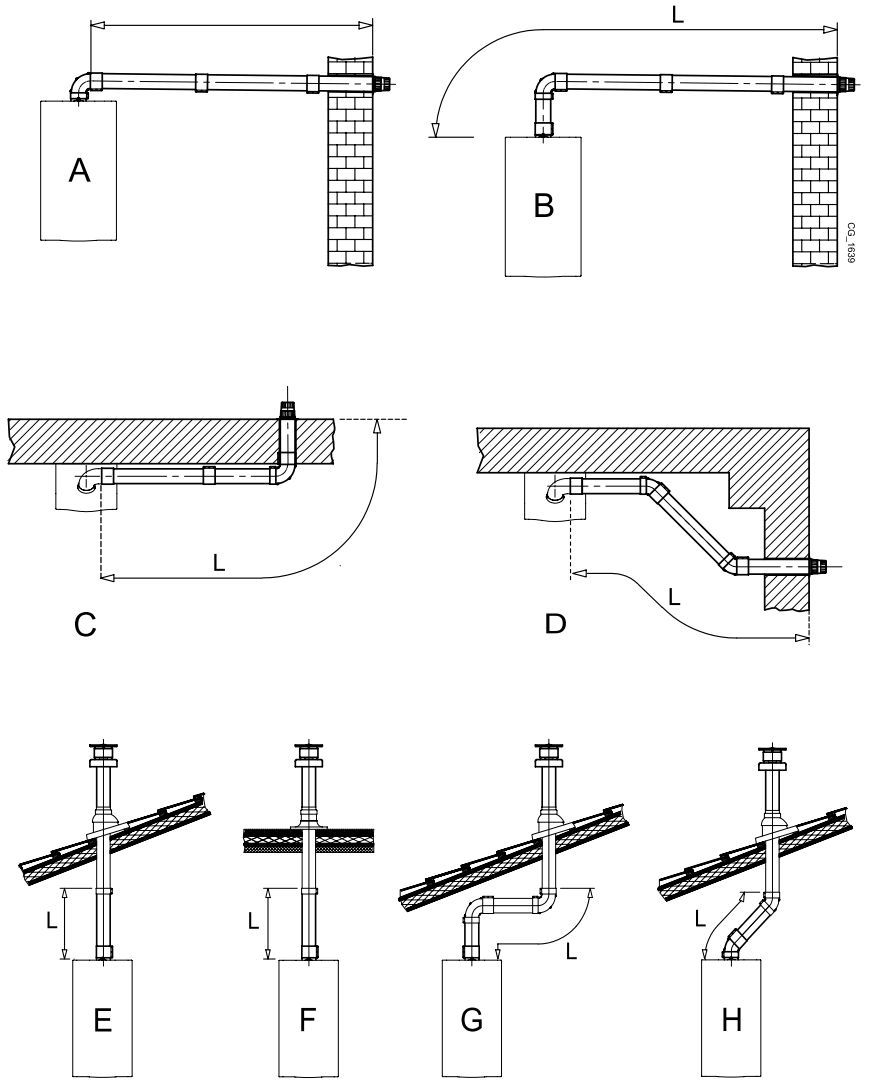

A B	Lmax = 10 m - Ø 110/160 mm
C D	Lmax = 9 m - Ø 110/160 mm
E F	Lmax = 10 m - Ø 110/160 mm
G	Lmax = 8 m - Ø 110/160 mm
H	Lmax = 9 m - Ø 110/160 mm

5. CASCADE FLUES

This type of duct evacuates the products of combustion of more than one boiler in a cascade connection through a shared fumes collector. The collector may only be used to connect the boilers to the flue duct. Available diameters are: Ø125 mm - Ø160 mm and Ø200 mm. A range of accessories is available on request.

BOILER MODEL	**MAXIMUM NUMBER OF BOILERS IN A CASCADE CONNECTION**		**PARAMETER 9524** Minimum power rpm	
	Ø160 mm *(250 kW Max)*	Ø200 mm *(500 kW Max)*	**G20**	**G31**
WH 90	2	5	1450	1650
WH 110	2	4	1500	1500

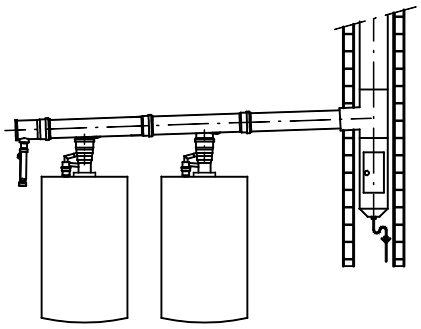

In this outlet typology, a flue no-return valve, Ø 80/110 mm, must be fitted to each boiler. Change the parameter 9524 as shown in table following the procedure described in chapter 13.1.

The flue header size must be calculated by a qualified technician during the system design stage, as required by current regulations.

6. BOILER PUMP

The boiler is supplied without the circulation pump. This component must be installed on the heating return to allow water to circulate between the boiler and the low loss header and can be purchased off the shelf or supplied by **POTTERTON COMMERCIAL** as an accessory (modulating pump).

- In the first case the pump is installed on the heating return union near the boiler. To size it correctly see the Flow/Pressure drops chart in chap. "BOILER PUMP" (Size the pump in accordance to the ĐT of the system design.
- In the second case the pump is installed directly on the boiler removing the pipe on the internal circuit (first remove the front casing). For hydraulic performance data, see the Flow/Head charts in chap. "BOILER PUMP".

The water in the system is circulated by the relative pumps, see chap. "BOILER PUMP". Check that the flow of the water circulating in the boiler is not less than the value indicated in the following table.

Model	**Minimum flow rate (l/h)**	**Operating flow rate (l/h) with POTTERTON COMMERCIAL low loss header**
WH 90	2000	4200
WH 110	2250	4600

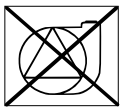

HYDRAULIC RESISTANCE

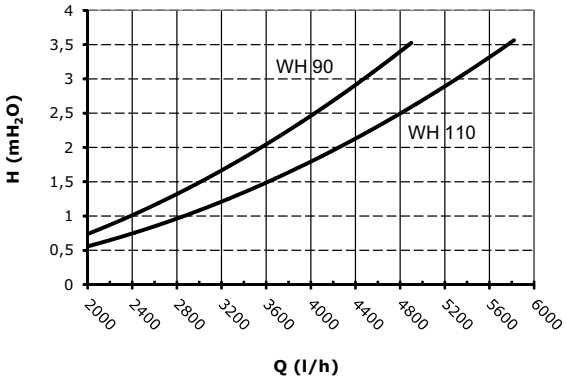

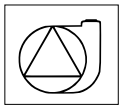

MODULATING PUMP OPERATION GRAPHS

WH 90

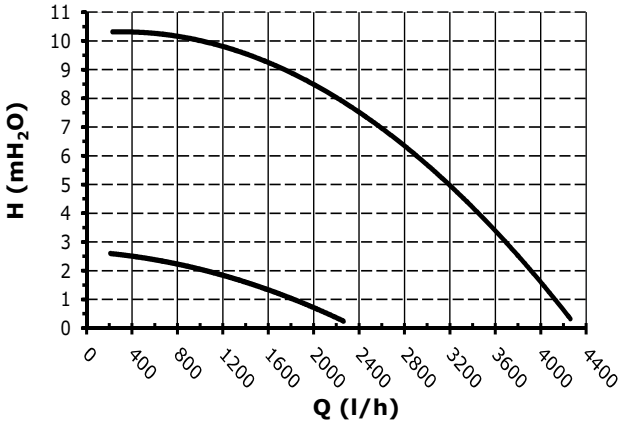

WH 110

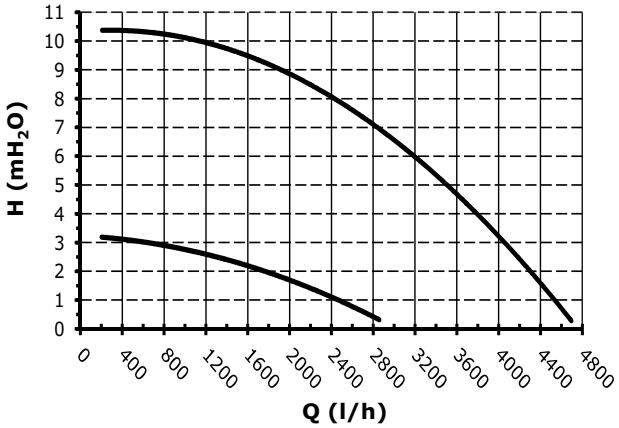

7. PUMP CAPACITY/ HEAD

The hydraulic pump, supplied as an accessory kit from POTTERTON COMMERCIAL, is a modulating pump. The purpose of the pump is to circulate the water between the boiler and the hydraulic separator.

KEY TO PUMP CHARTS - see chap. "BOILER PUMP"

Q	RATE OF FLOW
H	HEAD

THE PUMP FLOW / HEAD CHARTS CAN BE CONSULTED IN CHAP.* "BOILER PUMP"*.

8. ELECTRICAL CONNECTIONS

This machine is only electrically safe if it is correctly connected to an efficient earth system in compliance with current safety regulations. Connect the boiler to a 230V single-phase earthed power supply using the supplied three core cable, observing correct Live-Neutral polarity.
Use a double-pole switch with a contact separation of at least 3 mm.
When replacing the power supply cable, fit a harmonised 3x0,75 mm^2 cable with a maximum diameter of 8 mm. To access the terminal block, remove the front boiler panel (fixed with two screws at the bottom), turn the control box downwards and access terminal blocks **M1, M2, M3**, used for the electrical connections, after removing the protective cover. The 3.15 A fast-blowing fuses are incorporated in the power supply terminal block (to check and/or replace the fuse, pull out the black fuse carrier).

SEE WIRING DIAGRAM IN CHAP. **"ELECTRICAL CONNECTIONS"**

Make sure that the overall rated power input of the accessories connected to the appliance is less than 2A. If it is higher, install a relay between the accessories and the electronic board.

The connections in terminal blocks M1- M3 are high voltage (230 V). Before making connections, make sure the appliance is disconnected from the power supply. Check the input polarity on terminal block M1: L (LINE) - N (NEUTRAL).

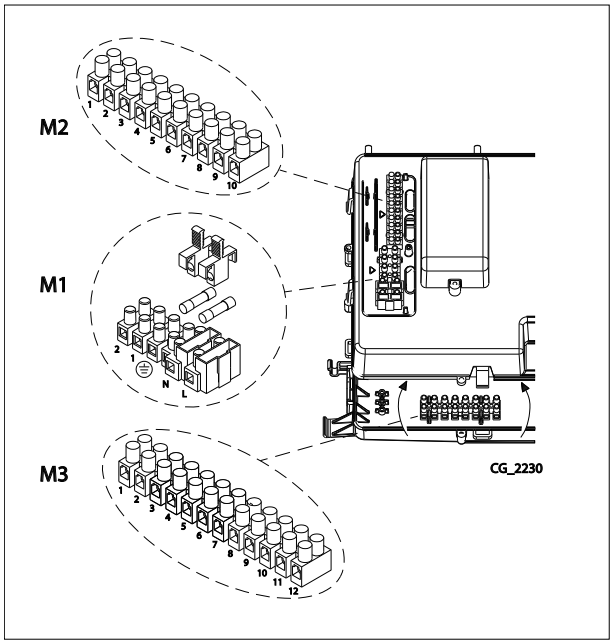

TERMINAL BLOCK M1

(L) = **Live** (brown)

(N) = **Neutral** (light blue).

⏚ = **Earth** (yellow-green).

(1) (2) = contact for **Room Thermostat**.

Put back the jumper on terminals 1-2 of boiler terminal block M1 if the room thermostat is not used or if the Remote Control is installed.

TERMINAL BLOCK M2

Terminals 1 (back-lighting) - 2 (earth) - 3 (+12V): connection to the Remote Control (low voltage) supplied as an accessory.

Terminals 4 - 5 (common): Outdoor temperature sensor (supplied as an accessory)

Terminals 6 - 5 (common): 2nd Auxiliary Sensor (sensors for solar plant, cascade system, zone system, etc.).

Terminals 7 - 5 (common): 1st Auxiliary Sensor (sensors for solar plant, cascade system, zone system, etc.).

Terminals 9-10: storage tank sensor connection.

Terminal 8: not used.

TERMINAL BLOCK M3

Terminal 1-2: (230Vac - max 1A) power supply of modulating boiler pump (PWM)

Terminal 2-3: (max 1A) alimentazione pompa non modulante di caldaia (ON - OFF)

Terminal 4: not used

Terminal 5-6: PWM signal of the modulating pump

Terminal 7-8: not used

Terminal 9 - 10: Domestic Hot Water tank pump (max 1 Amp)

Terminal 11 - 12: Heating System pump (device connected downstream of the hydraulic separator - max 1 Amp)

If the appliance is connected to an underfloor system, install a limit thermostat to prevent the circuit from overheating.

Use the relative cable grommets at the bottom of the boiler to thread the cables through to the terminal blocks.

A 250Vac/250Vac relay with a minimum current rating of 16A and able to withstand a starting current of above 100A is required to connect the external pumps.

ILLUSTRATED WIRING DIAGRAMS

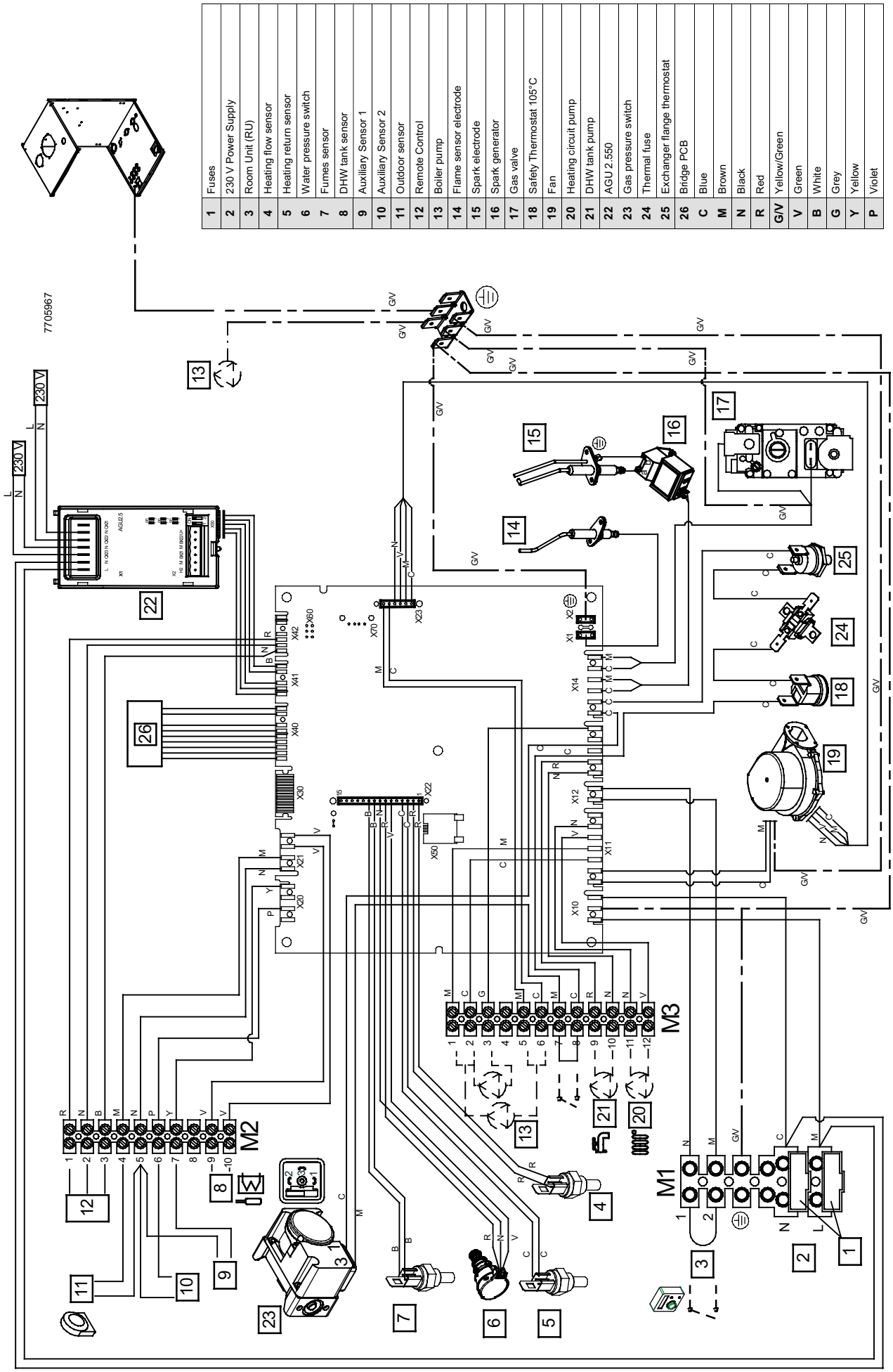

8.1 INSTALLING THE CONTROL PANEL ON THE WALL

For the boiler to work with the Control Panel mounted on the wall, purchase accessory **B** supplied with the base **B1** and position it on the boiler as shown in the figure. Also see the mounting and operation instructions supplied with the kit **B**. Proceed as follows:

- Switch off the boiler.
- Pass the three wires from the boiler terminal block **M2** through the hole in the base **B1** to apply to the wall.
- Connect wires **1-2-3** of the boiler terminal block **M2** to terminals **(1)-(2)-(3)** of the base terminal block **B1** respectively.
- Fix the base **B1** to the wall using the expansion grips and screws supplied with the accessory.
- Apply the Control Panel **A** to the base fixed to the wall, taking care not to apply excessive force.
- Place accessory **B** on the front boiler panel.
- Power the boiler making sure that the Control Panel lights up.

The wire (1) from the boiler terminal block M2 powers the display backlighting (12 V). This wire does not have to be connected for the wall-mounted Control Panel to work.

KEY TO WALL-MOUNTED CONTROL PANEL CONNECTIONS

A	Control Panel	**B**	Led interface accessory	**B1**	Base for wall-mounted Control Panel
(1)	Display backlighting +12V	**(2)**	Earth connection	**(3)**	Power input/Signal +12V

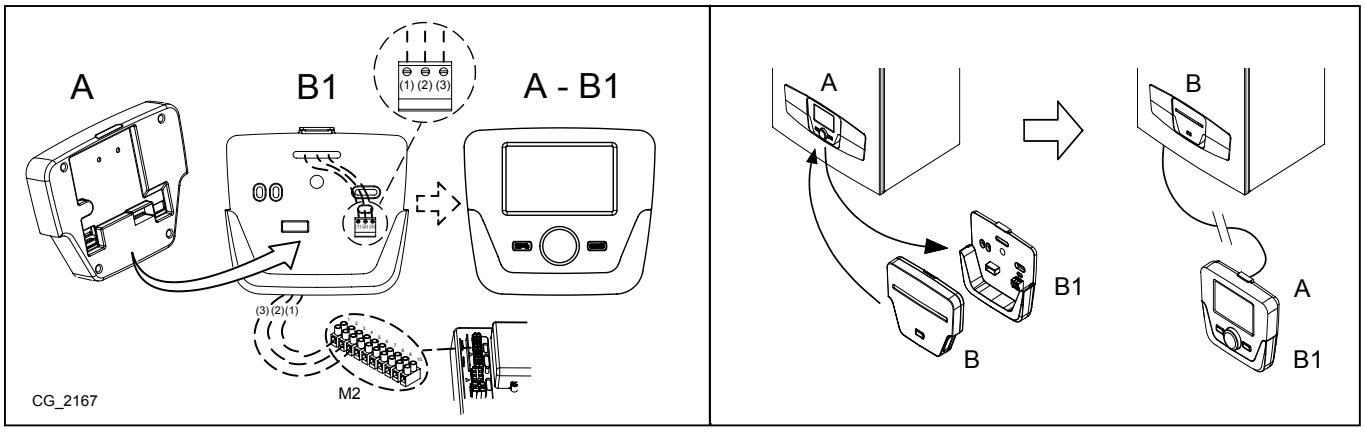

For the wall-mounted Control Panel to work it must be configured (ambient probe and modulating flow temperature enabled).

8.1.1 PARAMETERS SETTING

ALL MODIFIED PARAMETERS SHOULD BE NOTED DOWN IN THE TABLE AT THE END OF THIS MANUAL.

KEY TO FIGURE MENU

1	Enduser	**3**	Engineer
2	Commissioning	**4**	OEM

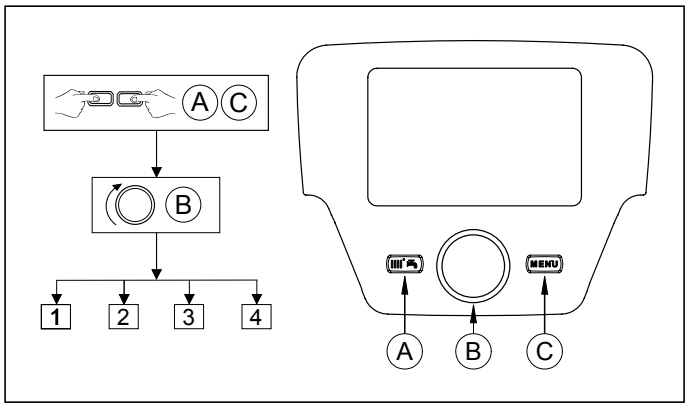

The following procedure is used to access the four boiler programming menus:

- from the main menu **C**.
- **A** and **C** (hold down for approx. 6 seconds) **B** menu **1**-**2**-**3**-**4** (see figure to side and key).
- **C** to go back one menu at a time to the main menu.

When the Control Panel is wall-mounted enable the **room sensor** and **flow temperature modulation** as follows:

A) ROOM SENSOR

- Access menu **2**.
- **B** **Operator unit** **B** to confirm.
- **B** programme row **40** (Used as) **B**.
- **B** (anti-clockwise) **Room unit 1** **B** to confirm (the room sensor is now active).
- **C** to return to the previous menu then **B** **Configuration** **B**.
- **B** programme row **5977** (Function input H5) then **B** to confirm.
- **B** **None** **B** to confirm.

For correct operation of the environment unit during the reduced time band it is necessary to set the parameter 5977 = "none".

B) FLOW TEMPERATURE MODULATION

To set flow temperature modulation, disable parameter **742** (HC1). Proceed as follows:

- Access menu **2**.
- **B** **Temps / mode CH1** **B** to confirm **B** **742** (Flow temp setpoint room stat) **B** to confirm.
- **B** (anti-clockwise) **"---"** then **B** to confirm.

If, when turning the knob* B *on the main menu, the display visualises the boiler flow temperature instead of the ambient temperature, parameter* 742 *has not been set correctly.

After every system configuration (e.g.: solar combination, connection an external storage boiler, etc.) perform the following procedure to update the boiler board to the new configuration:

- Access menu 2 as indicated at the beginning of this section.
- **B** **Configuration** **B** **B** programme row **6200** then **B.**
- **B** **Yes** then **B** to confirm.

ZONE SYSTEM WITH INSTALLATION OF THE REMOTE CONTROL

The electrical connection and the adjustments required to manage a system divided into zones with use of the Remote Control differs according on the accessories connected to the boiler. To install and configure, see the instructions of the **Expansion Module** supplied as an accessory.

ADJUSTING THE TEMPERATURE OF THE HIGH TEMPERATURE HEATING SYSTEM

To avoid frequent starting and stopping, raise the minimum temperature setpoint of the boiler in the heating mode by setting parameters **740**, to not less than 25°C, using the procedure described in point **B**.

TEMPERATURE ADJUSTMENT ON LOW TEMPERATURE HEATING SYSTEM

For a low temperature system (such as underfloor heating), reduce the maximum CH temperature setpoint on the boiler by setting parameter **741** (point B**)** to a value not greater than 55°C.

9. ACCESSORIES NOT INCLUDED IN THE PACKAGING

9.1 OUTDOOR SENSOR

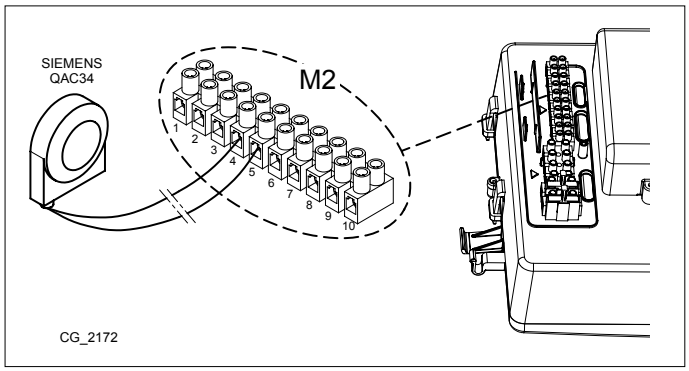

The External Probe, supplied as an accessory, can be connected to the boiler as illustrated in the figure to the side. The following procedure is used to set a parameter, called **room influence** which is used to determine the importance of the ambient temperature with respect to the external temperature and vice-versa (the factory setting is 50%-50%).

***E.g.**: if the ambient influence is set to 60%, the influence of the External Probe will consequently be 40% (the greater the set value of ambient influence, the lesser the influence of the External Probe will be in proportion, and vice-versa).*

The following procedure is used to set ambient influence:

- **C** then **A** and **C** (approx. 6 seconds) Enduser – Commissioning - Engineer - OEM.
- **B** **"Commissioning"** **B** to confirm.
- **B** **"Temps / mode CH1"** **B** to confirm.
- **B** programme row **750** (Room influence) **B** to confirm.
- **B** and choose the **%** value to assign to the parameter that determines how much the ambient affects the system then **B** to confirm.
- **C** to return to the previous menu.

SETTING THE "Kt" CLIMATE CURVE

To set the climate curve **Kt,** access **menu 2** as described in section 8.1.1 and proceed as follows:

- **B** **720** (Heating curve slope) **B** to confirm
- **B** (**from 0.10 to 4**) **B** to confirm.
- Select the climate curve from among those available, see the curve chart in chap. **"OUTDOOR SENSOR"** (the preset curve is 1.5).

KEY TO CURVE CHART Kt - see chap. **"OUTDOOR SENSOR"**

	Flow temp		Outside temp

WEATHER COMPENSATION CURVE GRAPHS

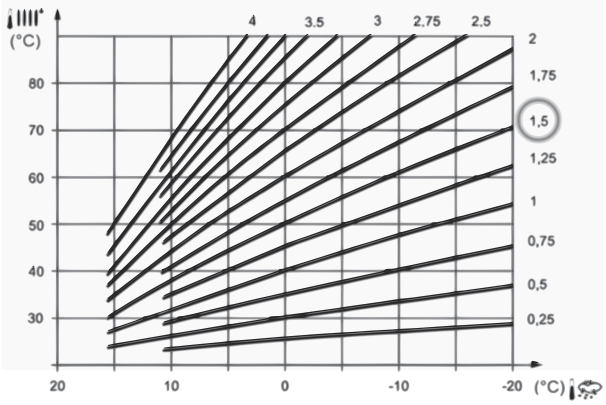

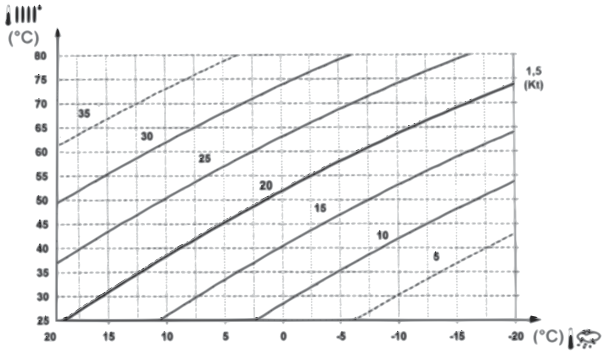

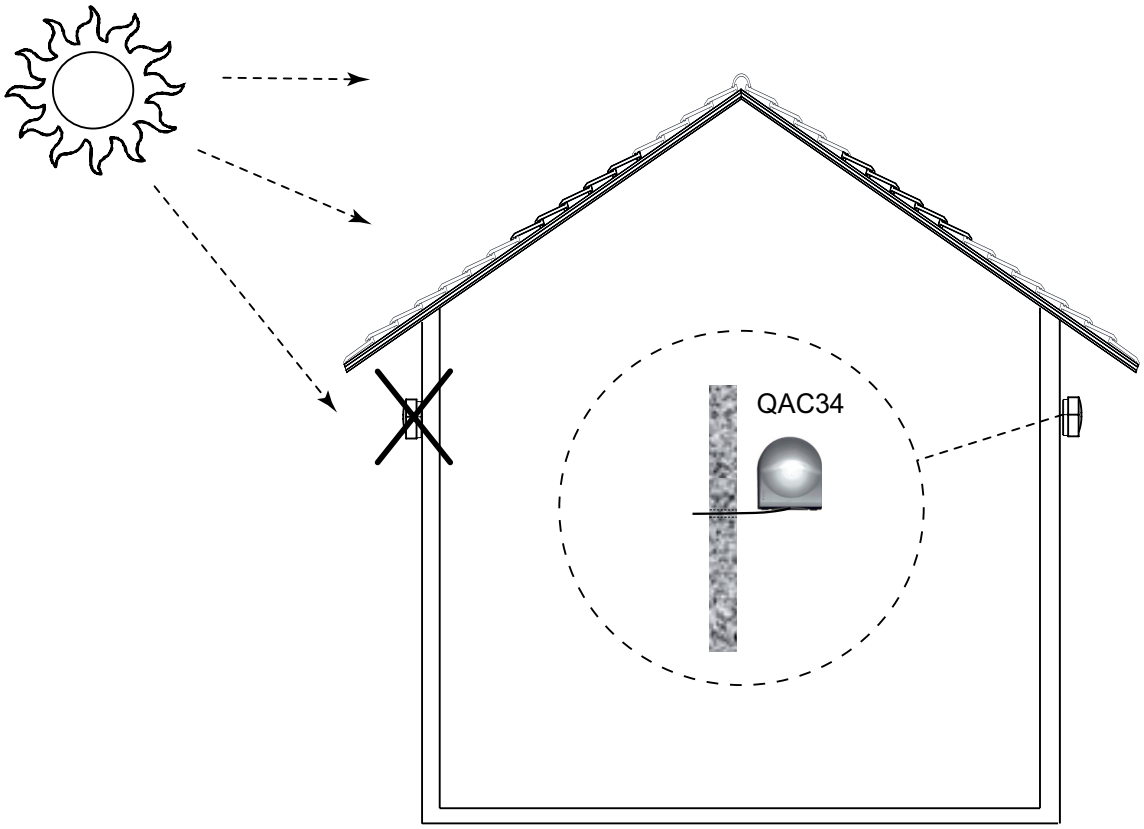

9.2 WIRING OF BOILER PUMP

Connect the boiler pump to terminals **1-2** of the **M3** terminal block as described in section 8. If the pump is a modulating pump connect the **PWM** signal to the termials **5-6** of the **M3** terminal block.

9.3 HEATING SYSTEM PUMP

Install the system pump downline from the hydraulic separator. Choose the pump according to the required system capacity/head characteristics (see chap. **"BOILER PUMP"**).

A 250Vac/250Vac relay with a minimum current rating of 16A and able to withstand a starting current of above 100A is required to connect the external pumps.

9.4 DOMESTIC HOT WATER CYLINDER

The boiler can be electrically connected to an external storage tank. A diagram of the hydraulic connection of the external storage tank is shown in chap. **"DIAGRAMS"**. Connect the storage tank pump to terminals **9-10** of the **M3** terminal block (see chap. **"ELECTRICAL CONNECTIONS"**). Install the storage boiler downline from the hydraulic separator. Use the sensor supplied as an accessory and connect it to terminals **9-10** of terminal block **M2** (see chap. **"ELECTRICAL CONNECTIONS"**). Make sure that the exchange capacity of the domestic hot water coil is appropriate for the power of the boiler.

A 250Vac/250Vac relay with a minimum current rating of 16A and able to withstand a starting current of above 100A is required to connect the external pumps.

The anti-legionellosis function is* NOT *ENABLED. To enable it, set parameter* 1640 *as described below.

To activate the ANTILEGIONELLOSIS function, proceed as follows:

- Access MENU 2 as described in section 8.1.1.
- **B** **Temps / mode hot water** **B** **B** programme row **1640** then **B** to confirm.
- **B** **Periodically** or **Fixed weekday** then choose one of the two items and **B** to confirm.

Choose **Periodically** to enable the function once a week on the set day and at the set time. To set the day and time, use the same procedure described above: set parameter **1641** to establish which days (from 1 to 7) the function must activate and parameter **1644** to set the starting time of the function.

Choose **Fixed weekday** to enable the function once a week on the set day and at the set time. Set parameter **1642** to establish the day of the week (from Monday to Sunday) on which the function must activate and parameter **1644** to set the start time of the function.

9.5 MIXED ZONES (see chap. "DIAGRAMS")

A mixed zone can be managed using the **AVS75** external module, supplied as an accessory. This accessory can manage: a zone pump, a mixing valve, a temperature sensor, a limit thermostat and a room thermostat. To connect the components and adjust the system read the manual provided with the accessory.

9.6 OUTDOOR SYSTEM MANAGEMENT MODULES

The boiler can independently manage up to three heating circuits by using external accessories such as room units, remote controls and external modules (AVS 75). The boiler electronics also comprises a wide range of functions for personalising and managing various system types. To assure correct system operation, a number (from 1 to 3) must be assigned to each accessory in order to allow the boiler board to recognise it. Consequently, carefully read the instructions provided with the accessories.

9.7 BOILERS IN A CASCADE CONNECTION (see chap. "DIAGRAMS")

The **AVS75** external unit, supplied as an accessory, is used to manage a heating system with up to 16 boilers connected in a cascade arrangement and a possible separate storage tank providing domestic hot water. This accessory, connected to one of the cascade boilers, can directly control the circuit components up to a maximum of 3 independent relay outlets, 2 temperature sensors, 1 high voltage limit thermostat connector and one 1 control input (e.g.: room thermostat). The system also requires an **OCI 345** interface on each boiler comprising in the cascade arrangement.

THE HYDRAULIC DIAGRAMS OF THE CASES DESCRIBED CAN BE FOUND IN CHAP. "DIAGRAMS".

9.8 AGU 2.550

Use the **AGU 2.550** , already installed in the boiler, to send information from the boiler as described below to a BMS panel.

ELECTRICAL CONNECTION	
X1 (L-N)	Power supply (230V 50Hz AC) connected to the boiler terminal block M1 (C+M)
X1 (QX21)	Not used
X1 (QX22-N)	Boiler OPERATION (light on = run)
X1 (QX23-N)	Boiler ALARM (light on = lockout)
X2 (H2-M)	INPUT Electrical Signal 0÷10 V

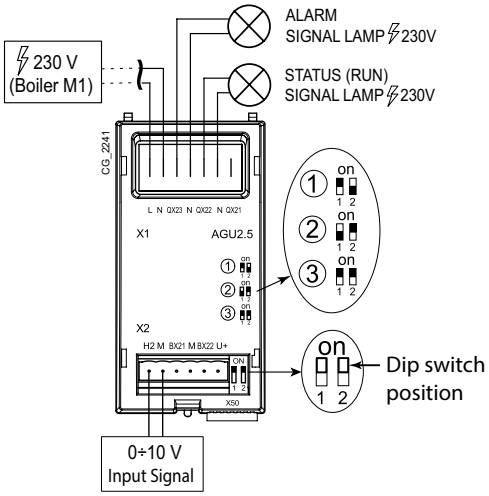

9.9 CONNECTING THE ROOM THERMOSTAT

The connections in terminal block M1 are in high voltage (230 V). Before making connections, make sure the appliance is disconnected from the power supply. Check the polarity: L (LIVE) - N (NEUTRAL).

To connect the Room Thermostat to the boiler, proceed as described below:

- Switch off the boiler;
- Access the terminal block **M1**;
- Remove the jumper from the ends of contacts **1-2** and connect the wires of the volt free Room Thermostat;
- Switch on the boiler and make sure the Room Thermostat works correctly.

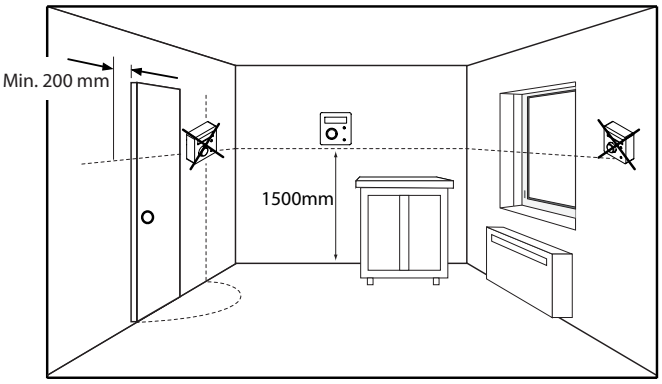

10. COMMISSIONING THE BOILER

When the boiler is powered up, the code “311” appears on the display and the boiler is ready for “initial ignition”.
Follow the procedure “GAS EXTRACTION FUNCTION” as described in the section below and enable programme 312.
After this operation, the boiler is ready to ignite the burner.

To light the boiler correctly, proceed as follows:

- Check that the system pressure is correct (section 11);
- Power the boiler;
- Open the gas tap.

During initial ignition, the burner may not ignite (causing the boiler to shut down) until any air in the gas pipes is vented. To re-ignite the boiler, see section OPERATING MODES.

CONTROL PANEL

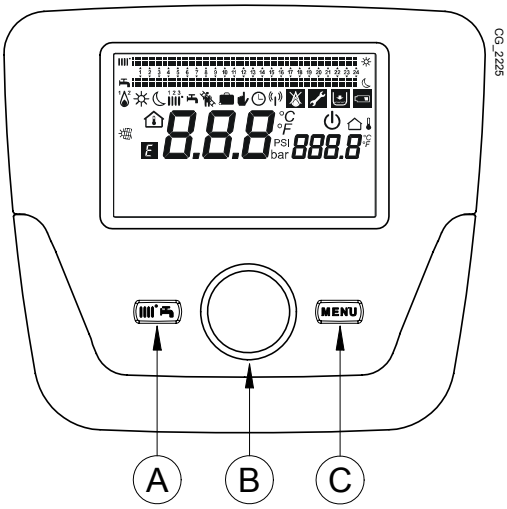

Key to SYMBOLS	
1 2	Burner lit (Power %: 1<70% - 2>70%)
	Operating mode: comfort ambient temperature
	Operating mode: reduced ambient temperature (only if installed indoors)
1 2 3	Operating mode in heating: 1 = zone 1 – 2 = zone 2 – 3 = zone 3
	Operating mode: DHW enabled
	Operating mode: AUTOMATIC
	Operating mode: MANUAL

	Ambient temperature (°C)		Connection to SOLAR plant
	External temperature (°C)	E	Fault
	Off: heating and DHW disabled (only boiler anti-freeze protection is active)		Fault preventing the burner from lighting
	Flue cleaner function enabled		Technical Service Centre call-in
	Holiday programme function enabled		Boiler/system water pressure low
	Data transmission (only if the WIRELESS device is connected)	°C, °F, bar, PSI	Set unit of measurement (SI/US)

10.1 BASIC CONTROL PANEL SETTINGS

INITIAL IGNITION CONFIGURATION PROCEDURE

When igniting the boiler for the first time, perform the following procedure (the text is written in **ENGLISH** until the user is requested to set his/her language as illustrated in sequence A-B-C of the figure indicated below):

- **B** for 5 seconds;
- the display shows a percentage value from 1 to 100. Data synchronisation takes a few minutes to complete;
- set the language, date and time.

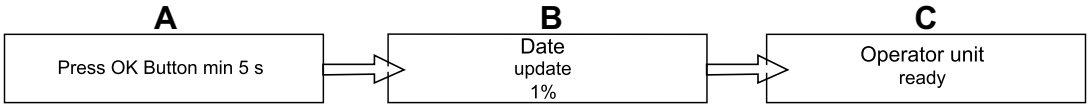

11. FILLING THE SYSTEM

The pressure displayed on the pressure gauge has to be between **1** - **1.5** bar, with the system cold. If it is lower, turn the system filling tap installed by the fitter.

IMPORTANT: open the tap very slowly in order to vent the air.

The boiler is fitted with a hydraulic pressure switch which prevents the boiler from working if there is no water.

If pressure drops occur frequently (monthy basis), have the system checked by the Authorised technical service agent.

12. SYSTEM AIR EXTRACTION FUNCTION

This function is used to facilitate the elimination of the air inside the heating circuit when the boiler is first installed or after maintenance when the water is drained from the primary circuit and re-filled.
The electronic board will activate a pump on/off cycle lasting 10 minutes. The function will automatically stop at the end of the cycle.

To manually interrupt the function, repeat the procedure described above. When the function is disabled, " off" is shown on the display.

During this phase it is recommended to keep the pressure in the system at a value between 1 and 1.5 bar.

13. GAS VALVE COMMISSIONING

To commission the gas valve, enable the commission function as described in section "SPECIAL FUNCTIONS" and carry out the following operations:

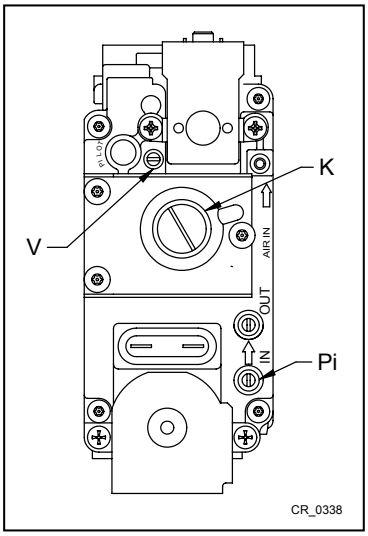

1) Commissioning MAXIMUM heat output.
Check that the CO_2/O_2 measured on the flue duct, with the boiler operating at maximum heat capacity, matches that indicated in table 1C. If it does not, turn the adjustment screw (**V**) on the gas valve. Turn the screw clockwise to decrease the level of CO_2 and anti-clockwise to increase it.

2) Commissioning REDUCED heat output
Check that the CO_2/O_2 measured on the flue duct, with the boiler operating at minimum heat capacity, matches that indicated in table 1C. If it does not, remove the threaded brass cap on the gas valve and turn the adjustment screw (**K**). Turn the screw clockwise to increase the level of CO_2 and anticlockwise to decrease it.

For each CO_2/O_2 value found at the maximum thermal capacity, there is a range of CO_2/O_2 values at the minimum thermal capacity shown in the same line of the table.
The nominal calibration values of the gas valve for each type of gas used are shown in bold.
The CO_2/O_2 values are with the cover closed.
The maximum permitted CO value must be lower than 250 ppm.

TABLE 1C

G20 (-90)				G31 (-90)			
CO_2 (%)		O_2 (%)		CO_2 (%)		O_2 (%)	
P max	P min	P max	P min	P max	P min	P max	P min
9,5	8,8÷9,2	3,9	4,5÷5,2	10,5	10÷10,4	4,9	5,1÷5,7
9,4	8,7÷9,1	4,1	4,7÷5,4	10,4	9,9÷10,3	5,1	5,2÷5,8
9,3	8,6÷9	4,3	4,8÷5,6	10,3	9,8÷10,2	5,2	5,4÷6
9,2	8,5÷8,9	4,5	5÷5,7	10,2	9,7÷10,1	5,4	5,5÷6,1
9,1	8,4÷8,8	4,7	5,2÷5,9	10,1	9,6÷10	5,5	5,7÷6,3
9	**8,3÷8,7**	**4,8**	**5,4÷6,1**	**10**	**9,5÷9,9**	**5,7**	**5,8÷6,4**
8,9	8,2÷8,6	5	5,6÷6,3	9,9	9,4÷9,8	5,8	6÷6,6
8,8	8,1÷8,5	5,2	5,7÷6,5	9,8	9,3÷9,7	6,0	6,1÷6,7
8,7	8÷8,4	5,4	5,9÷6,6	9,7	9,2÷9,6	6,1	6,3÷6,9
8,6	7,9÷8,3	5,6	6,1÷6,8	9,6	9,1÷9,5	6,3	6,4÷7,1
8,5	7,8÷8,2	5,7	6,3÷7	9,5	9÷9,4	6,4	6,6÷7,2

G20 (-110)			
CO_2 (%)		O_2 (%)	
P max	P min	P max	P min
9,7	9,2÷9,6	3,6	3,8÷4,5
9,6	9,1÷9,5	3,8	3,9÷4,7
9,5	9÷9,4	3,9	4,1÷4,8
9,4	8,9÷9,3	4,1	4,3÷5
9,3	8,8÷9,2	4,3	4,5÷5,2
9,2	**8,7÷9,1**	**4,5**	**4,7÷5,4**
9,1	8,6÷9	4,7	4,8÷5,6
9	8,5÷8,9	4,8	5÷5,7
8,9	8,4÷8,8	5	5,2÷5,9
8,8	8,3÷8,7	5,2	5,4÷6,1
8,7	8,2÷8,6	5,4	5,6÷6,3

G31 (-110)			
CO_2 (%)		O_2 (%)	
P max	P min	P max	P min
10,5	9,8÷10,2	4,9	5,4÷6
10,4	9,7÷10,1	5,1	5,5÷6,1
10,3	9,6÷10	5,2	5,7÷6,3
10,2	9,5÷9,9	5,4	5,8÷6,4
10,1	9,4÷9,8	5,5	6÷6,6
10	**9,3÷9,7**	**5,7**	**6,1÷6,7**
9,9	9,2÷9,6	5,8	6,3÷6,9
9,8	9,1÷9,5	6,0	6,4÷7,1
9,7	9÷9,4	6,1	6,6÷7,2
9,6	8,9÷9,3	6,3	6,7÷7,4
9,5	8,8÷9,2	6,4	6,9÷7,5

13.1 GAS CONVERSION

When converting from natural gas to propane (LPG), before calibrating the gas valve as described above, replace the venturi assembly (B) as indicated in the figure. To achieve this, dismount the gas pipe (threaded nut G1") and remove the three screws securing the flange. Afterwards, make sure there are no gas leaks. Modify the parameters (fan rpm) as indicated in table 2.

For cascade ducts, change the parameter 9524 increasing the number of fan revolutions (rpm) by 200 (see table in chapter 5).

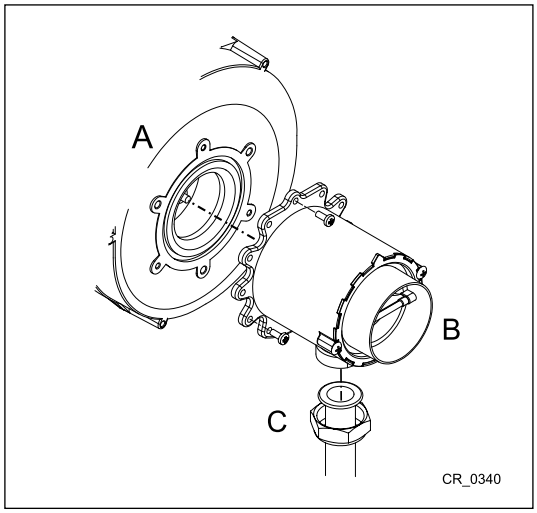

TABLE 2

Access MENU 2 as described in section PARAMETERS SETTING.

- **Boiler Settings** **B** **B** **2441** **B**.
- **B** **B**.
- C Burner control **B**.
- **B** **9524** B.
- **B** **B**.
- **B** **9529** **B**.
- **B** **B**.
- **B** **9512** **B**.
- **B** **B**.

	PARAMETERS - rpm						VENTURI Ø (mm)	GAS NOZZLES Ø (mm)	
	9524		**2441 - 9529**		**9512**				
Boiler model	Min. power		Max. power		Ignition power				
	G20	G31	**G20**	G31	**G20**	G31	**G20** - G31	**G20**	G31
WH-90	1250	1500	6500	6200	2400	2400	34	5.6 (n°2)	4.5 (n°2)
WH-110	1300	1300	6900	6700	2500	3000	38	6.4 (n°2)	5.0 (n°2)

14. SPECIAL FUNCTIONS

Available functions are:

- **Chimney sweeper** (programme row **303**) - Options: Full load (maximum thermal power of the boiler), Part load (reduced thermal power), Full heating load (maximum thermal power in the heating mode).
- **Controller stop function** (**304**) - Options: from 100% (maximum thermal power) to 0% (reduced thermal power). This function facilitates gas valve calibration operations.
- **Manual control** (**301**) - Options: 25 - 90 (° C) In this mode the boiler operates at the set temperature value.
- **Deaeration function** (**312**) - Options: On (function enabled) - Off (function disabled). See section "System gas extraction function".

The procedure used to enable these functions is the following:

- From the main menu **A** and **C** (hold down for approx. 6 seconds) names of the FUNCTIONS (see figure to side: 303 - 304 - 301 - 312)
- **B** to choose the FUNCTION **B** to ENABLE the chosen function then **B** FUNCTION menu **B** to edit (see example below).

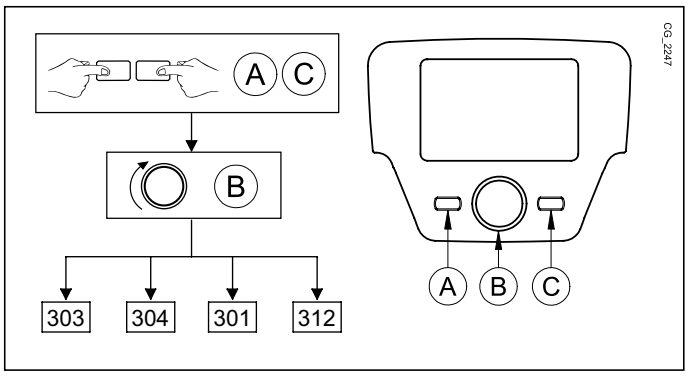

E.g.: *turn knob **B** to enable the CALIBRATION function (programme row **304**), press knob B, the function is now active and preset to 100% (the boiler is at its maximum thermal power). Press the knob and turn it to select the required power percentage (0% corresponds to the reduced thermal power level).*

To manually interrupt the function, repeat the procedure described above. When the function is disabled, " off" is shown on the display.

15. TEMPERATURE ADJUSTMENT

To adjust the temperature, turn knob **B** to the right to increase and to the left to decrease than **B** to confirm.

CENTRAL HEATING

The temperature to adjust can be:

- **Flow temperature:** if the Control Panel is installed on the boiler.
- **Ambient temperature:** if the Control Panel is installed on the wall.

DOMESTC HOT WATER

To adjust the Domestic Hot Water setpoint, select the "Hot water temp setpoint" function as described in section 3 and **B** to set the request temperature value.

16. OPERATING MODES

16.1 HEATING

The boiler can operate in 4 different ways in the heating mode: On - Reduced - Timed - Off. To set one of the operating modes, proceed as follows:

CASE 1 : the Control Panel is installed in the boiler

Turn knob **B** to adjust the boiler flow temperature.

DESCRIPTION OF OPERATING MODES

- **On**: heating is always enabled (symbols displayed).
- **Reduced**: heating is always disabled (symbols displayed);
- **Timed**: heating depends on the set time band (symbols displayed);
- **Off**: heating is disabled.

CASE 2 : the Control Panel is installed on the wall

Turn knob **B** to adjust the ambient temperature of the room to heat.

DESCRIPTION OF OPERATING MODES

- **On**: the temperature of the room to heat is comfort, the factory setting is 20 °C (symbols displayed);
- **Reduced**: the temperature of the room to heat is reduced, the factory setting is 16 °C (symbols displayed);
- **Timed**: heating depends on the set time band (symbols displayed);
- **Off**: the boiler start when the room temperature falls below 6°C.

When the boiler operates in the Timed ***mode, turn the knob*** **B** ***to temporarily adjust the temperature. This modification remains valid until the subsequent time band change.***

The boiler anti-freeze is always active, the boiler ignites when the flow temperature falls below 5 °C. The function operates if the appliance is electrically powered and there is gas.

16.1.1 ADJUSTING THE REDUCED AMBIENT HEATING TEMPERATURE

To set the **Reduced** ambient temperature, proceed as follows:

- **C** **B** **"Temps / mode CH1"** **B**.
- **B** programme row **712** (Reduced temperature) then **B** (the temperature value starts flashing) ;
- **B** to edit the temperature and **B** to confirm.
- **C** to return to the previous menu.

Apart from using key **A** of section 3, the comfort ambient temperature can also be adjusted by editing parameter **710** ,as described above.

16.2 HOLIDAY PROGRAMME

This function allows the user to choose what ambient temperature value to set during his/her absence (for example, during a holiday). The minimum **anti-freeze** temperature or the **reduced** temperature (programme row **648**) can be set. Programme row **641** (Select) features 8 programming levels called **Period 1** (8 programmable on/off time bands). When the function is enabled, the symbol appears on the display.

The procedure to follow to enable the function and programme the time bands is shown below:

- **C** **Holiday Heating 1**
- **B** programme row **641** ("Preselection") **B Period 1**(flashing) **B** and select which one to set (from 1 to 8) then **B** programme row **642**.
- **B** to set the start period (**642**) **B** **B** to set the month **B** and **B** to set the day **B** to confirm.
- Repeat the same sequence of instructions to set programme row **643** (end of period, the boiler will become operative again the following day).
- After programming the start and end of the period **B** programme row **648** **B** **B** to set the minimum operating temperature **anti-freeze** or **reduced** and **B** to confirm.
- Repeat these three points to set other periods or **C** to return to the previous menu.

17. HOURLY PROGRAMMING

Before proceeding with programming, enable the* Timed *operating mode (section OPERATING MODES).

Hourly programming in the heating mode (**Time central heating CH1**) and in the DHW mode (**Time hot water**) is used to set the automatic operation of the boiler in certain daily time bands and in certain days of the week. The example indicated in the following figure refers to the daily time band 1 (see below) where **a** is the operating period at the comfort temperature and **b** is the operating period in the reduced mode (section OPERATING MODES). Boiler settings can be adjusted by **groups of days** or by **single days** (every day from Mon to Sun).

PRESET WEEKLY INTERVALS
(Programme row 500 for heating and 560 for DHW)

- Mon - Sun (groups of days)
- Mon - Fri (groups of days)
- Sat - Sun (groups of days)
- Mon - Tue - Wed - Thu - Fri - Sat - Sun (single days)

PRESET DAILY TIME BANDS
(Programme row 514 for heating and 574 for DHW)

- 06:00-08:00 .. 11:00-13:00 .. 17:00-23:00 (example in figure to side)
- 06:00-08:00 .. 17:00-23:00
- 06:00-23:00

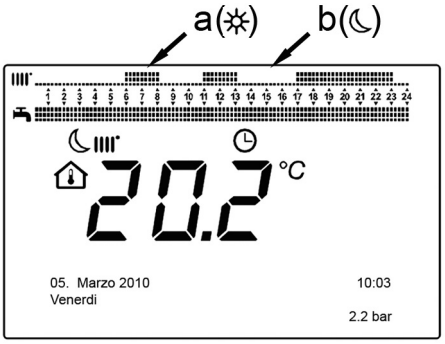

17.1 GROUPS OF DAYS

This function is used to set one of the 3 available weekly intervals, each with three hourly time bands for switching the boiler on and off. These are preset but can be modified by the user - programme rows **501...506**. The intervals are:

Mon - Sun (factory setting) **/ Mon - Fri / Sat - Sun**.

If the system is divided into zones, each with its own Control Panel/Ambient Unit, each single zone must be individually set on each device.

17.2 SINGLE DAYS

The daily boiler switching on and off phases can all be modified by the user. The 3 pre-set time bands are available for each single selected day, as indicated in the table at the end of this section.

17.3 HOURLY PROGRAMMING EDIT PROCEDURE (heating / DHW)

After performing hourly programming using the preset programmes, it is always possible to modify the three time bands - programme rows **501...506** for heating and **561...566** for DHW as described below.

HEATING CIRCUIT PROGRAMMING EDIT PROCEDURE

- **C** **B** **"Time central heating CH1"** **B** programme row **500** (Select days).
- **B** and the **groups of days** field (section GROUPS OF DAYS) starts flashing **B** to scroll the days ("Groups of days" or "Single days") **B** to confirm.
- **B** programme row **514** (Select default timings?) **B** and **B** to select one of the 3 pre-set programmes of the "Groups of days" hourly programming (section GROUPS OF DAYS) or **B** clockwise by a click to pass to manual programming: programme rows 501....506.

DHW CIRCUIT PROGRAMMING EDIT PROCEDURE

The procedure for enabling hourly programming of the DHW is the same as the hourly programming for the heating circuit. The only difference is the name of the menu **"Time hot water"** and the programme rows to set **560** (Select days). To disable this function, follow the procedure described in the "Resetting the Original Factory Programme" section.

SUMMARY TABLE

GROUPS OF DAYS	PROGRAMME ROW 514 (heating) / 574 (DHW)

Weekly interval	Preset programmes		
	On1 – Off1	*On2 – Off2*	*On3 – Off3*
Mon-Sun	06:00 – 08:00	11:00 – 13:00	17:00 – 23:00
Mon-Fri	06:00 – 08:00		17:00 – 23:00
Sat-Sun	06:00 – 23:00		

SINGLE DAYS	PROGRAMME ROWS 501 502 503 504 505 506 (heating) / 561 562 563 564 565 566 (DHW)

Daily interval	Preset programmes		
	On1 – Off1	*On2 – Off2*	*On3 – Off3*
Mon-Tue-Wed-Thu-Fri-Sat-Sun	06:00 – 08:00	11:00 – 13:00	17:00 – 23:00

To simplify programming existing programmes can be copied to other days of the week. The following procedure is used.

COPYING A PROGRAMME TO ANOTHER DAY

After programming the time band of a certain day, it can be copied to one or more days of the week.

The parameter between brackets "( )" refers to hourly programming in DHW

- From programme row **514 (574)** (if one of the 3 preset time bands has been used) or from programme row **501 (561)** (if manual programming has been performed) turn the knob clockwise to programme row **515 (575).**
- **Copy?** appears on the display.
- **B** **Copy to** and the day of the week flashes.
- **B** to scroll the days of the week, select which to copy the programme to and **B** to confirm.
- Repeat the above point to copy the same daily programme to other days.
- **C** to return to the previous menu.

RESETTING THE ORIGINAL PROGRAMMING (FACTORY SETTING)

The weekly programming can be cancelled by enabling heating in the comfort mode (the set value is **00-24** , equal for all the days of the week).

- **C** **B** **Time central heating CH1** **B** programme row **500** (Time central heating CH1) or **560** (Time hot water).
- **B** by one position programme row **516** (**Pre-set values**) for heating and programme row **576** for DHW.
- **B** by one position until **yes** is displayed **B** to confirm.
- **C** to return to the previous menu.

After terminating the procedure, the daily programming bar on the main menu changes. Heating is always enabled during the day. To reprogramme the boiler, repeat the procedure described in section HOURLY PROGRAMMING.

17.4 CONTROL PANEL BLOCK FUNCTION

In order to safeguard the set programming from unauthorised people, block all the functions associated with button **C**.

BLOCK procedure

- **C** **B** **Operator unit** **B** to confirm.
- **B** programme row **27** (Programming lock) **B** to confirm.
- **B** **On** **B** to enable the block function.

RELEASE procedure

- **C** **A** and **B** (hold down for approx. 6 seconds) **Programming temporarily unlocked**".

This release phase is temporary and lasts 1 minute, after which the block resumes automatically. To permanently disable the function, perform the temporary release procedure and then **B** to **Off** at programming row **27** (Programming lock) and **B** to confirm the release.

18. SWITCHING OFF THE BOILER

To turn off the boiler, disconnect the electric power supply using the two-pole switch. In the “Off” operating mode the boiler stays off but the electrical circuits remain powered and the frost protection function remains active.

19. PROLONGED SHUTDOWN / FROST PROTECTION

Do not drain the whole system as filling up with water again could cause unnecessary and harmful scale to build up inside the boiler and the heating elements. If the boiler is not used during winter and is therefore exposed to the danger of frost, add some specific anti-freeze to the water in the system (e.g.: propylene glycol coupled with corrosion and scale inhibitors). The electronic boiler management system includes a “frost protection” function for the heating system which, when delivery temperature falls below 5°C, lights the burner until a delivery temperature of 30°C is reached.

The function is operative if: the boiler is electrically powered, there is gas, system pressure is normal and the boiler is not blocked.

ENERGY-SAVING TIPS

Adjustment in the heating mode
Adjust the boiler flow temperature depending on the kind of system. For systems with radiators, set a maximum heating water flow temperature of approximately 60°C, and increase this value if the required room temperature is not reached. For systems with radiant floor panels, do not exceed the temperature indicated by the system designer. Use the External Sensor and/or Control Panel to automatically adjust the flow temperature to atmospheric conditions or the indoor temperature. This ensures that no more heat than that effectively necessary is produced. Use room thermostats to adjust the temperature without overheating the rooms. Every extra degree centigrade means consuming approximately 6% more energy. Also room ambient temperature depending on how the rooms are used. For example, the bedroom or the least used rooms can be heated to a lower temperature. Use the programmable timer and set the night-time room temperature at approximately 5°C lower than that during the day. There is no appreciable saving to be achieved by setting it any lower. Only in case of a prolonged absence, such as a holiday, should the temperature setpoint be lowered. Do not cover radiators as this prevents the air from circulating correctly. Do not leave the windows partially open to ventilate the rooms but open them completely for a short period.

Domestic hot water
Setting the domestic hot water at the required temperature without mixing it with cold water saves a lot of money. Additional heating wastes energy and creates additional scale. Recommended minimum storage temperature of 60°C to reduce the Legionella risk.

20. ACCESS TO THE PARAMETER CONFIGURATION MENUS

KEY TO DISPLAY (see figure to side)

a	Date: day, month, year
b	Day of the week
c	Pressure in boiler / heating circuit
d	Clock: hour and minutes

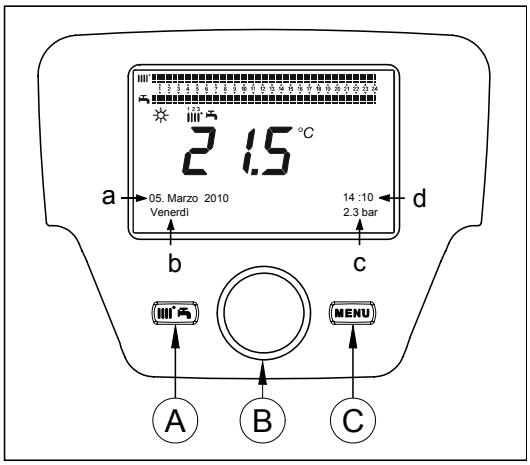

To access the list of configuration menus, proceed as follows (consult the "Description of Symbols" section):

C **B** to select the required menu; **B** to confirm or **C** to exit without saving.

The list of configuration menus is:

- Information (INFORMATION MENU)
- Set time and date (TIME AND DATE MENU)
- Operator unit (CHANGE LANGUAGE)
- Time central heating (HOURLY PROGRAMMING)
- Time central heating CH3
- Time hot water
- Time auxiliary
- Holiday heating (HOLIDAY PROGRAMME)
- Temps / mode
- Temps / mode hot water
- Instantaneous HW heater (not used)
- Error (FAULTS)
- Diagnostics heat generation

20.1 INFORMATION MENU

In case a fault arises, the first data displayed is the fault code.

To display boiler information, select "**Information**" as indicated in section 20.

Boiler temperature	°C	Boiler flow temperature
Outside temp	°C	Outside temp
Outside temp min	°C	Minimum memorised outside temperature value (with external probe connected)
Outside temp max	°C	Maximum memorised outside temperature value (with external probe connected)
DHW temperature	°C	DHW temperature (value read by the boiler DHW circuit probe)
Manifold temperature	°C	Instantaneous temperature of manifold sensor (with connection to solar plant)
State central heating (1,2,3)	(On/Off)	Heating circuit operating mode (circuits: 1,2,3)
State hot water	Charging	DHW circuit operating mode
State boiler	(On/Off)	Boiler operating mode
Solar state	-	Indicates if sunlight is sufficient (with connection to solar plant)
Telephone customer service	n	xxxxxxxxxx

20.2 TIME AND DATE MENU

To set the time and date, follow the procedure indicated in section 20 and proceed as follows:

- Access the **Set time and date menu** **B** 1 (Hours / minutes) **B** (the hour flashes)
- **B** to edit the hour **B** to confirm (the minutes flash) **B** to edit **B** to confirm.
- **B** to edit 2 (Day / month) and 3 (Year) performing the same procedure as above.
- **C** to return to the previous menu.

20.3 CHANGE LANGUAGE (Operator unit menu)

To set the language, follow the procedure indicated in section 20 and proceed as follows:

- access the **Operator unit menu** **B** and select programme row **20** (Change language);
- **B** to select a language **B** to save.
- **C** to return to the previous menu.

21. FUNCTIONS ASSOCIATED WITH THE EASY MENU BUTTON (rapid menu)

Press **A** e **B** to scroll the following functions:

- Standby/operation
- Hot water boost
- Central heating mode CH1
- Room temperature CH1
- Hot water mode
- Rated DHW setpoint

then **B** to enable the selected function, **B** to modify the value and **B** to confirm.

Standby/operation
If this function is enabled, appears on the display and boiler operation is disabled in the DHW and heating modes (the anti-freeze function remains enabled). To recover boiler operation, repeat the procedure described above.

Hot Water boost
This function is used to heat the storage boiler, if fitted, until the set temperature is reached, regardless of the set time band.

Central heating mode CH1
This menu is used to select the boiler operating mode as indicated in section 16.

Room temperature CH1
Select this menu to change the comfort ambient temperature value.

DHW mode
Select this menu to enable "**On**" or disable "**Off**" DHW. The "**Eco**" function disables pre-heating (only present in boilers producing domestic hot water).

Rated DHW setpoint
Select this menu to change the maximum DHW temperature value.

When DHW is disabled, disappears from the display.

When the function of pre-heating is active, the symbol is flashing even without any D.H.W. request.

22. FAULTS

A	Main fault code (see table)
B	Secondary fault code
C	Description of fault

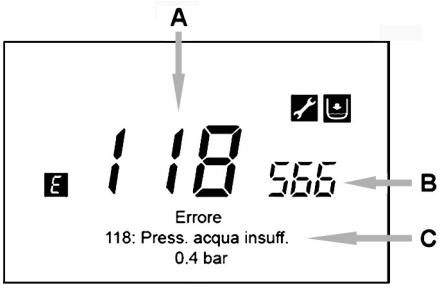

The faults shown on the display are identified with the symbol , the information shown on the display is:

- A fault code (**A**)
- A secondary fault code (**B**);
- A brief description of the fault (**C**);
- The following symbols could appear on the display: the meaning of which is explained in section COMMISSIONING THE BOILER "CONTROL PANEL".

In the event of a fault, to display the main menu, **C**. The symbol remains on the display indicating that the appliance is in the fault status. After a minute the display returns to visualise the fault screen as indicated in the figure.

22.1 RESETTING FAULTS

Faults can be reset AUTOMATICALLY, MANUALLY or by calling in the AUTHORISED TECHNICAL SERVICE CENTRE. The various modes are described in detail below:

AUTOMATIC
If the flashing symbol appears on the display, the fault will be automatically reset (temporary fault) as soon as the event that caused it is eliminated.
Faults of this type are often generated by elevated water flow and/or return temperatures in the boiler. They are therefore automatically reset as soon as the temperature falls below the critical value. If the same fault is repeated with a certain frequency and/or is not automatically reset by the boiler, contact the Authorised Technical Service Centre.

MANUAL
To manually reset the fault, when the fault code appears **B** **B** "**Yes**" **B** to confirm. The fault code disappears after a few seconds.

CALLING IN THE AUTHORISED TECHNICAL SERVICE CENTRE
If the symbol appears on the display together with the symbol , contact the **AUTHORISED TECHNICAL SERVICE CENTRE**. Before calling, note down the fault code/s and the short message accompanying the fault.

If a fault code is displayed that is not included in the list or if a certain fault occurs frequently, contact the AUTHORISED TECHNICAL SERVICE CENTRE.

E	Description of fault	E	Description of fault
10	External probe sensor	**125**	No circulation safety trip (control performed via a temperature sensor)
20	NTC flow sensor	**128**	No flame
28	NTC fumes sensor	**130**	Fumes NTC tripped due to overtemperature
40	NTC flow sensor	**133**	Ignition failure (4 attempts)
50	NTC DHW sensor (only for heating-only model with storage boiler)	**151**	Boiler board internal fault
52	Solar DHW sensor (if connected to a solar plant)	**152**	Generic parameter setting error
73	Solar manifold sensor (if connected to a solar plant)	**153**	Forced reset when the Reset button is pressed and held for more than 10 seconds (see section "FAULTS THAT CANNOT BE RESET BY THE USER")
83	Communication problem between boiler board and control unit. Probable short circuit on wiring.	**160**	Fan fault
84	Address conflict between control units (internal fault)	**321**	NTC domestic hot water sensor faulty
98	Accessory not detected or recognized (*)	**343**	Generic parameter setting error of solar plant (if connected to a solar plant)
109	Air in boiler circuit (temporary fault)	**384**	Abnormal light (parasite flame – internal fault)
110	Safety thermostat/thermal fuse/exchanger flange thermostat/ gas pressure switch (**) tripped due to over temperature (pump probably blocked or air in heating circuit)	**385**	Input voltage too low
111	Safety thermostat tripped due to overtemperature.	**386**	Fan speed threshold not reached
117	Pressure in hydraulic circuit too high	**430**	No circulation safety trip (control performed via a pressure sensor)
118	Pressure in hydraulic circuit too low	**432**	No functional hearth or safety thermostat tripped due to over temperature (E110)

(*) After powering up the boiler (or after a Reset for lockout), the error appears on the display once the self-check is completed. The fault code is displayed permanently if the accessory is not recognized.
(**) See Section "ADJUSTMENT AND SAFETY DEVICES".

23. FAULTS THAT CANNOT BE RESET BY THE USER

In the case of **FAULTS** that cannot be reset, for example E151 or E162 or exceeding of 5 attempts by the user to perform a manual RESET, it is necessary to RESET the board. Remove the control panel (if it is fitted in the boiler) and press the black button **R** located under the rubber cap (symbol).

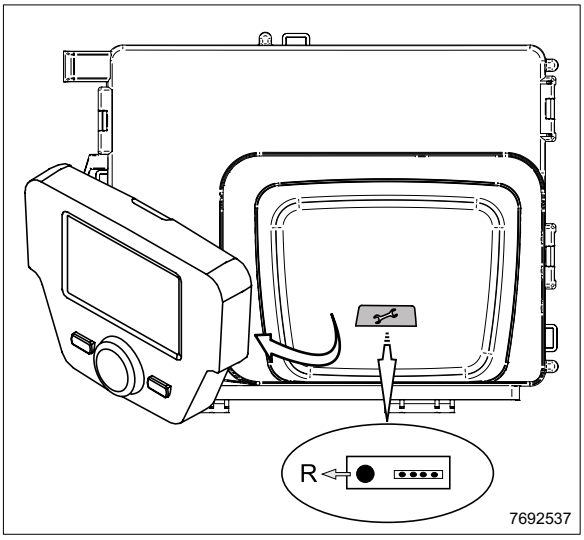

24. ADJUSTMENT AND SAFETY DEVICES

The boiler has been designed in full compliance with European reference standards and in particular is equipped with the following:

- **Limit thermostat**

Thanks to a sensor placed on the CH flow line, this thermostat interrupts the flow of gas to the burner if the water in the primary circuit overheats.

- **Exchanger flange thermostat (260°C)**

This device is located on the exchanger flange and interrupts the flow of gas to the burner if the front insulation yields and overheats the exchanger or the flange gasket develops a fault. Press the reset button on the thermostat and eliminate the fault.

- **Thermal fuse**

This device is located at the rear of the exchanger and interrupts the flow of gas to the burner if the rear insulation yields and overheats the exchanger. If this device cuts in, dismount the exchanger and replace the thermal fuse (see paragraph “THERMAL FUSE REPLACEMENT OF HEAT EXCHANGER”).

It is forbidden to disable this safety device.

- **NTC flue sensor**

This device is positioned on the fumes duct. The electronic board stops gas from flowing to the burner in case of over heating.

The above reset operation is only possible if the temperature is less than 90°C.

It is forbidden to disable this safety device

- **Flame ionisation detector**

The flame sensing electrode guarantees safety of operation in case of gas failure or incomplete ignition of the main burner. In these conditions, the boiler blocks.

- **Hydraulic pressure switch**

This device allows the main burner to be ignited only if system pressure is higher than 1 bar.

- **Pump post-circulation**

The electronically-controlled pump post-circulation function lasts 3 minutes and is enabled, in the heating mode, if the ambient thermostat causes the main burner to go out.

- **Antifreeze device**

The electronic boiler management system includes an "antifreeze" function for the heating and DHW systems which, when flow temperature falls below 5°C, operates the burner until a flow temperature of 30°C is reached. This function is enabled when the boiler is switched on, the gas supply is open and the system is correctly pressurised.

- **Pump anti-block function**

If no heat demand is received in the heating and/or DHW modes for 24 consecutive hours, the pumps will automatically start and operate for 10 seconds.

- **Hydraulic safety valve (heating circuit)**

This device is set to 4 bar and is used for the heating circuit. Connect the safety valve to a drain trap. Do not use it to drain the heating circuit.

- **Heating pump pre-circulation**

In case of a heat demand in the heating mode, the appliance can pre-circulate the pump before the burner is ignited. This pre-circulation phase last from a few seconds to a few minutes, depending on the operating temperature and installation conditions.

- **Gas pressure switch**

This device enables the main burner only to be switched on if the gas pressure is over 12 mbar.

The functions performed by the adjustment and safety devices are only operative if the boiler is switched on.

25. ROUTINE MAINTENANCE INSTRUCTIONS

To keep the boiler efficient and safe, have it checked by the Authorised Service Centre at the end of every 12 months.
Careful servicing ensures economical operation of the system.

26. ANNUAL SERVICING

The service must be performed only by qualified and competent staff in accordance with the Gas safety, Installation and use regulations. In UK this person need to be approved by the Health and Safety Executive. To optimise boiler efficiency, carry out the following at the annual service:

- Check the appearance and airtightness of the gaskets of the gas and combustion circuits. Replace any worn seals with new original spares;
- Check the state and correct position of the ignition and flame-sensing electrodes;
- Check the state of the burner and make sure it is firmly fixed;
- Check for any impurities inside the combustion chamber. Use a vacuum cleaner to do this;
- Check the gas valve is correctly calibrated;
- Check the pressure of the heating system;
- Check the pressure of the expansion vessel (system);
- Check the fan works correctly;
- Make sure the flue and air ducts are unobstructed;
- Check for any blockages inside the siphon.

Before commencing any maintenance operations, make sure the boiler is disconnected from the power supply. After servicing, reset the original operating parameters of the boiler if they were changed.

26.1 CLEANING THE HEAT EXCHANGER FUMES SIDE

Before starting to clean the heat exchanger, wait until the temperature is lower than 40°C and protect all the electric components against splashes of water.

Proceed as follows to clean the heat exchanger:

- Disconnect the boiler from the mains power supply.
- Close the gas inlet valve.
- Remove the front cover from the boiler.
- Lower the electrical box, ensuring it is protected against contact with water.
- Disconnect the cables of the ignition electrode, the flame sensing electrode, and the heat exchanger flange thermostat.
- Remove the fan-mixer-burner-flange assembly, unscrewing the 6 nuts M6 and the connector under the mixer.
- Protect the rear insulating panel (2) against water with a waterproof film, available in the cleaning kit.
- Accurately suck up the residue inside the combustion chamber and remove any scale, using a brush with plastic bristles available in the cleaning kit.
- Sprinkle the surfaces to be cleaned (1) generously with the appropriate liquid BX-HT Cleaner or similar using the appropriate spray bottle and wait 10 minutes (other products may be used, after consulting the authorised technical assistance service). Brush without rinsing and apply BX-HT Cleaner again. Let 10 more minutes pass, then brush again. If the result is not satisfactory, repeat the operation.
- When cleaning is finished, rinse with water.
- Replace the gasket of the burner support flange.
- To reassemble, proceed in the inverse order, tightening the 6 nuts of the flange with a torque of 5.5 Nm.

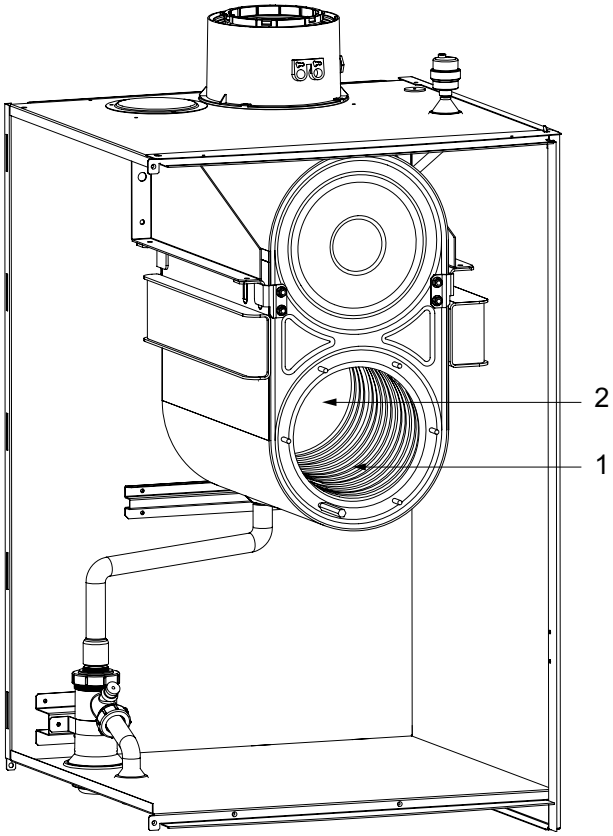

26.2 CHECKING THE BURNER

The burner needs no cleaning.

- Check the burner surface for damage, replace the burner if necessary.
- Check the positioning of the flame detection probe.
- Verify that the distance of the ignition electrode is within tolerance as shown in the figure.
- Check that the insulation of the burner flange it is not damaged otherwise replace it.

POSITIONING THE ELECTRODES

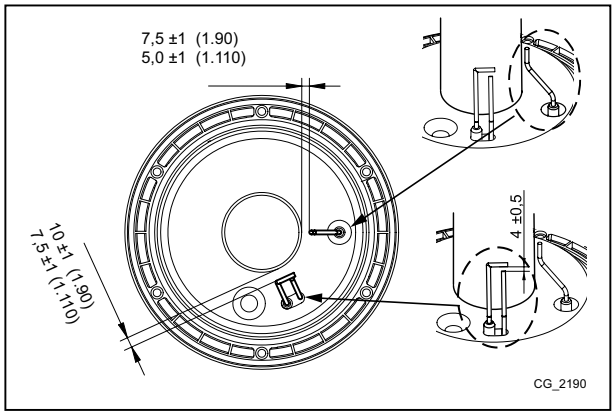

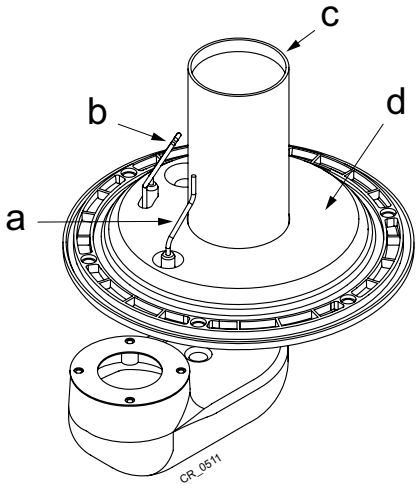

26.3 CLEANING THE CONDESATE TRAP

Unscrew the lower section of the water condense trap.

- Clean the bottom of the trap by flushing it out with water.
- Fill the lower section with water until about 10 mm below the upper edge.
- Fasten the lower section onto the condense trap again.

Do not operate the boiler with empty condense trap to avoid risk of poisoning through the gas combustions.

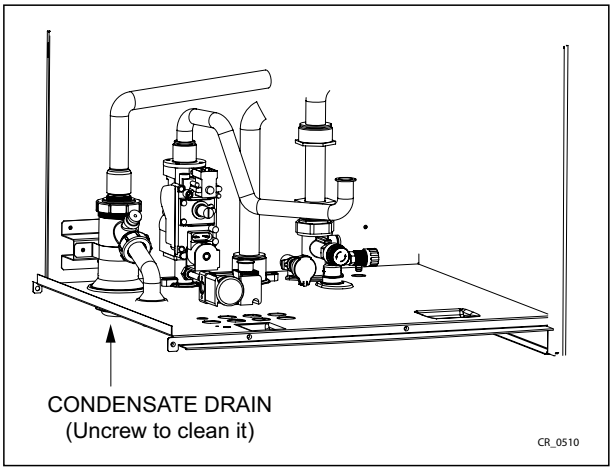

26.4 COMBUSTION PARAMETERS

To measure combustion efficiency and the emissions of the products of combustion, the boiler is fitted with two dedicated test points. One connection point is connected to the flue gas discharge circuit (**A**), and allows monitoring of the quality of the combustion products and the combustion efficiency. The other is connected to the combustion air intake circuit (**B**), allowing checking of any recycling of the combustion products in case of coaxial pipelines. The following parameters can be measured at the connection point on the flue gas circuit:

- temperature of the combustion products;
- oxygen (**O_2**) or carbon dioxide (**CO_2**) concentration;
- carbon monoxide (**CO**) concentration.

The temperature of the combustion air must be measured on the test point located on the air intake flue (**B**) by inserting the measurement sensor by about 90 mm (**C**).

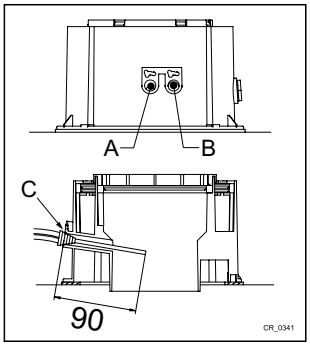

To enable the " CHIMNEY SWEEP MODE" consult section "SPECIAL FUNCTIONS".

27. THERMAL FUSE REPLACEMENT OF HEAT EXCHANGER

The thermal fuse is positioned on the rear of the heat exchanger as shown in the figure, is electrically connected in series with the safety thermostat. Its function is to protect the exchanger from overheating in case of insulation failure. When this occurs the device appears on the display the anomaly **E110**. If the cause is due to the rupture of the isolation it is necessary to remove the heat exchanger and replace the rear isolation and the thermal fuse.

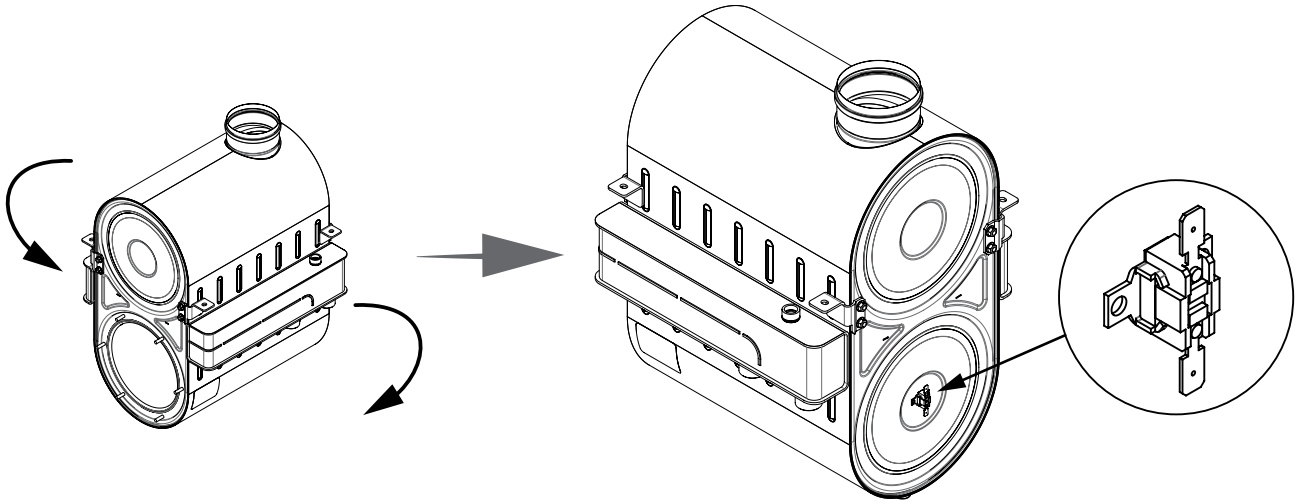

28. DISMANTLING, DISPOSAL AND RECYCLING

Only qualified technicians are authorised to service the device and system.

Before dismantling the appliance, be sure to disconnect the power supply, close the gas inlet shutoff valve and secure all of the boiler and system connections.
Dispose of the appliance correctly according to the laws and regulations in place. The appliance and accessories cannot be discarded along with normal household waste.
More than 90% of the materials that make up the appliance are recyclable.

29. DIAGRAMS

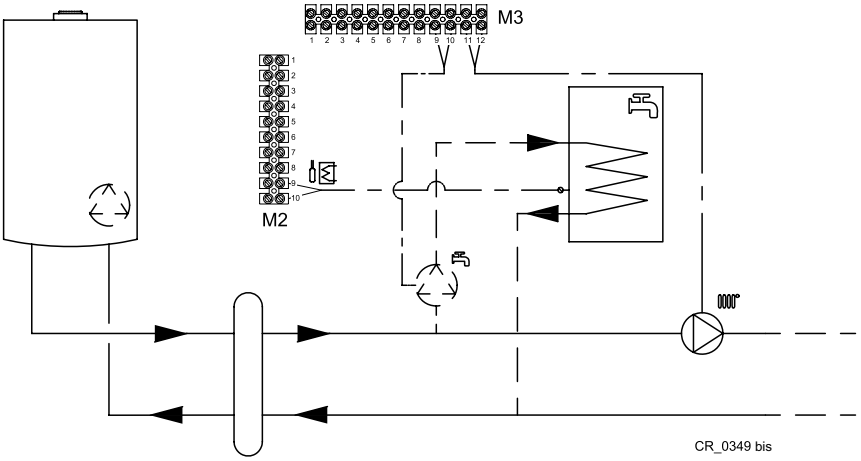
M3
1 2 3 4 5 6 7 8 9 10 11 12
1 2 3 4 5 6 7 8 9 10
M2
CR_0349 bis

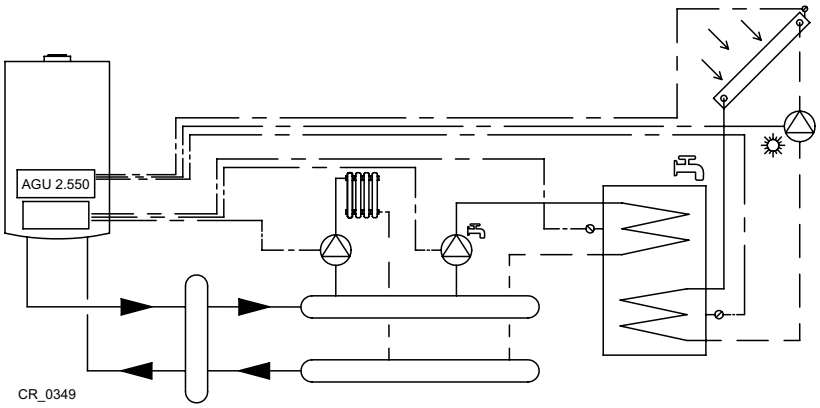
AGU 2.550
CR_0349

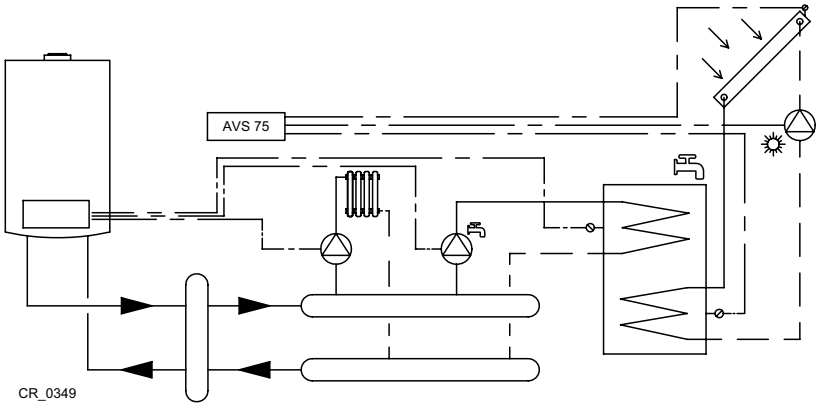
AVS 75
CR_0349

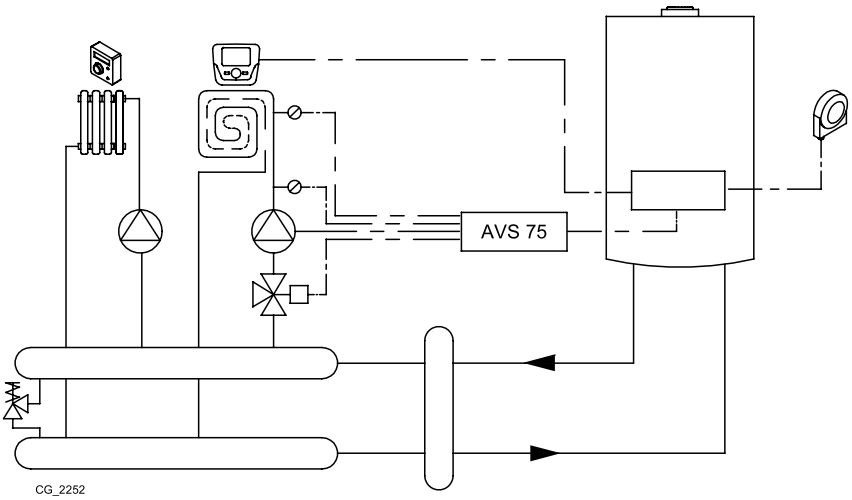
AVS 75
CG_2252

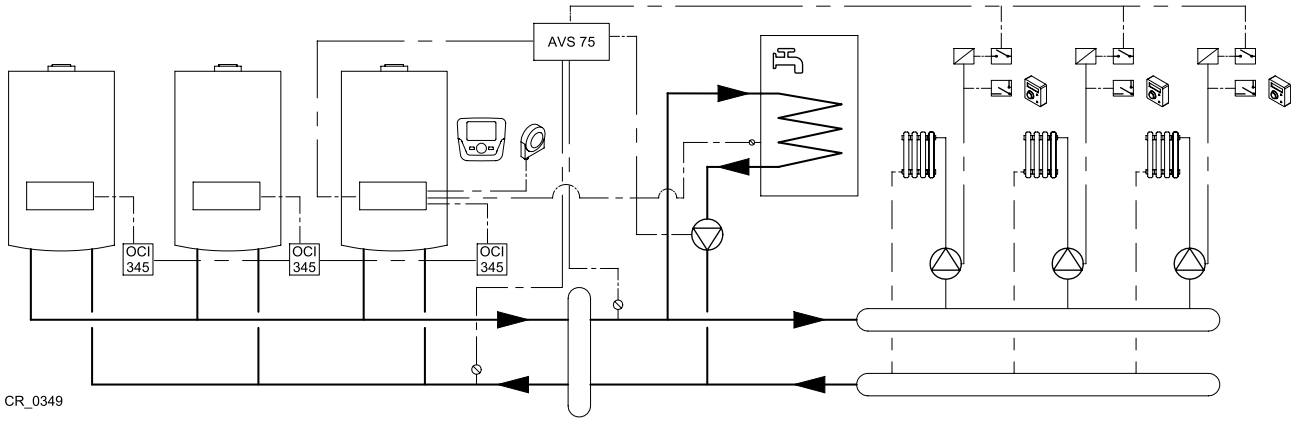
AVS 75
OCI 345
OCI 345
OCI 345
CR_0349

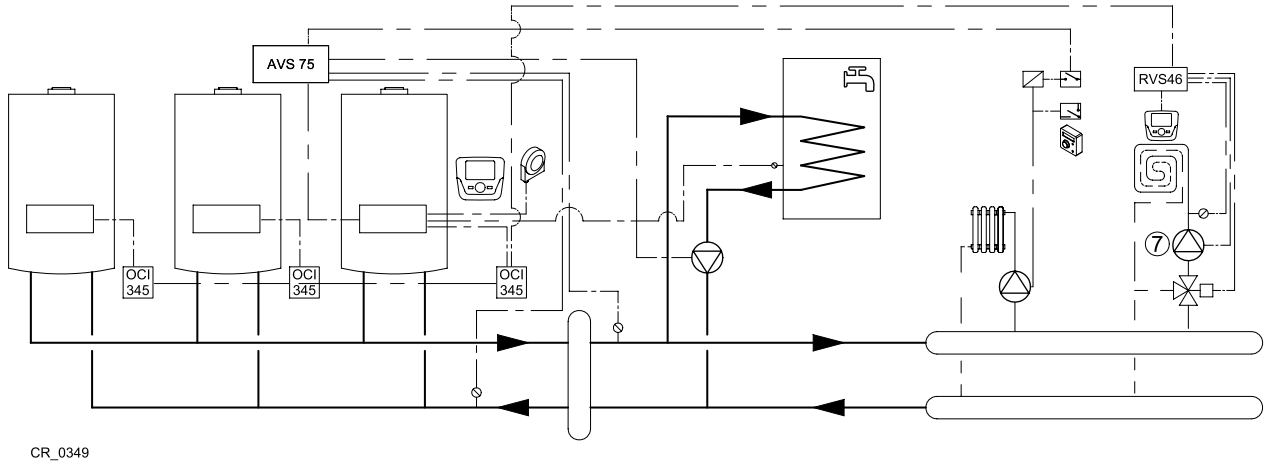
AVS 75
RVS46
OCI 345
OCI 345
OCI 345
7
CR_0349

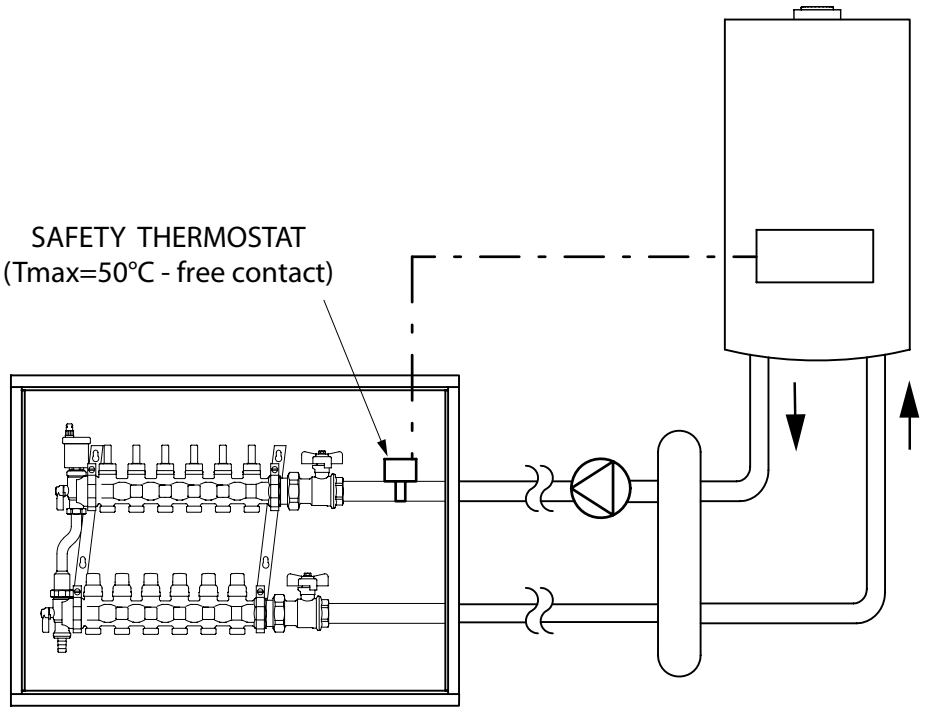
SAFETY THERMOSTAT
(Tmax=50°C - free contact)
CG_2482

MODIFIED PARAMETERS

Nr	VALUE	NOTE

Publication Date: MAY2018

Potterton Commercial
Innovation House
3 Oaklands Business Centre
Oaklands Park
Wokingham, RG412FD

Sales: 0845 070 1056
Technical: 0845 070 1057

Email: potterton.commercial@baxicommercialdivision.com
www.pottertoncommercial.co.uk

INVESTORS IN PEOPLE

Qualified for Energy Technology List
Authorised User No. 00284

bsi. ISO 9001 Quality Management
RS 33961

POTTERTON COMMERCIAL

7705189.01 (1-05/18)